EFFECTIVE: August 29, 2019

OWNER'S MANUAL

ELECTRIC CHAIN HOIST ER2 and NER2 SERIES

1/8 Ton through 5 Ton Capacity

Code, Lot and Serial Number

⚠ WARNING

This equipment should not be installed, operated, or maintained by any person who has not read and understood all the contents of this manual. Failure to read and comply with the contents of this manual can result in serious bodily injury or death, and/or property damage.

HARRINGTON
A KITO GROUP COMPANY

Table of Contents

Section **Page Number**

1.0 Important Information and Warnings …… 4

1.1 Terms and Summary

1.2 Warning Tags and Labels

2.0 Technical Information……..…….. 8

2.1 Specifications

2.2 Dimensions

3.0 Preoperational Procedures …… 13

3.1 Gearbox

3.2 Chain

3.3 Mounting Location

3.4 Mounting the Hoist

3.5 Electrical Connections

3.6 VFD Setup (Dual Speed Only)

3.7 Preoperational Checks and Trial Operation

4.0 Operation ……... 25

4.1 Introduction

4.2 Shall's and Shall Not's for Operation

4.3 Hoist Controls

5.0 Inspection …….. 29

5.1 General

5.2 Inspection Classification

5.3 Frequent Inspection

5.4 Periodic Inspection

5.5 Occasionally Used Hoists

5.6 Inspection Records

5.7 Inspection Methods and Criteria

Section **Page Number**

6.0 Maintenance & Handling 39

6.1 Count/Hour Meter

6.2 Lubrication – Load Chain, Hooks and Suspension

6.3 Lubrication – Gearbox

6.4 Motor Brake

6.5 Load Chain

6.6 Friction Clutch and Mechanical Load Brake with Friction Clutch

6.7 Storage

6.8 Outdoor Installation

6.9 Operational Environment

7.0 Troubleshooting 47

8.0 Warranty 50

9.0 Parts List 51

1.0 Important Information and Warnings

1.1 Terms and Summary

This manual provides important information for personnel involved with the installation, operation and maintenance of this product. Although you may be familiar with this or similar equipment, it is strongly recommended that you read this manual before installing, operating or maintaining the product.

Danger, Warning, Caution and Notice

Throughout this manual there are steps and procedures that can present hazardous situations. The following signal words are used to identify the degree or level of hazard seriousness.

⚠ DANGER Danger indicates an imminently hazardous situation which, if not avoided, ***will*** result in ***death or serious injury***, and property damage.

⚠ WARNING Warning indicates an imminently hazardous situation which, if not avoided, ***could*** result in ***death or serious injury***, and property damage.

⚠ CAUTION Caution indicates a potentially hazardous situation which, if not avoided, ***may*** result ***minor or moderate injury*** or property damage.

NOTICE Notice is used to notify people of installation, operation, or maintenance information which is important but not directly hazard-related.

⚠ CAUTION

These general instructions deal with the normal installation, operation, and maintenance situations encountered with the equipment described herein. The instructions should not be interpreted to anticipate every possible contingency or to anticipate the final system, crane, or configuration that uses this equipment. For systems using the equipment covered by this manual, the supplier and owner of the system are responsible for the system's compliance with all applicable industry standards, and with all applicable federal, state and local regulations/codes.

This manual includes instructions and parts information for a variety of hoist types. Therefore, all instructions and parts information may not apply to any one type or size of specific hoist. Disregard those portions of the instructions that do not apply.

Record your hoist's Code, Lot and Serial Number (see section 10) on the front cover of this manual for identification and future reference to avoid referring to the wrong manual for information or instructions on installation, operation, inspection, maintenance, or parts.

Use only Harrington authorized replacement parts in the service and maintenance of this hoist.

⚠ WARNING

Equipment described herein is not designed for and **MUST NOT** be used for lifting, supporting, or transporting people, or for lifting or supporting loads over people.

Equipment described herein should not be used in conjunction with other equipment unless necessary and/or required safety devices applicable to the system, crane, or application are installed by the system designer, system manufacturer, crane manufacturer, installer, or user.

Modifications to upgrade, rerate, or otherwise alter this equipment shall be authorized only by the original equipment manufacturer.

Equipment described herein may be used in the design and manufacture of cranes or monorails. Additional equipment or devices may be required for the crane and monorail to comply with applicable crane design and safety standards. The crane designer, crane manufacturer, or user is responsible to furnish these additional items for compliance. Refer to ANSI/ASME B30.17, “Safety Standard for Top-Running Single Girder Cranes”; ANSI/ASME B30.2 “Safety Standard for Top-Running Double-Girder Cranes”; and ANSI/ASME B30.11 “Safety Standard for Underhung Cranes and Monorails”.

If a below-the-hook lifting device or sling is used with a hoist, refer to ANSI/ASME B30.9, “Safety Standard for Slings” or ANSI/ASME B30.20, “Safety Standard for Below-the-Hook Lifting Devices”.

Hoists and cranes, used to handle hot molten material may require additional equipment or devices. Refer to ANSI Z241.2, “Safety Requirements for Melting and Pouring of Metals in the Metal Casting Industry”.

Electrical equipment described herein is designed and built in compliance with Harrington's interpretation of ANSI/NFPA 70, “National Electrical Code”. The system designer, system manufacturer, crane designer, crane manufacturer, installer, or user is responsible to assure that the installation and associated wiring of these electrical components is in compliance with ANSI/NFPA 70, and all applicable Federal, State and Local Codes.

Failure to read and comply with any one of the limitations noted herein can result in serious bodily injury or death, and/or property damage.

⚠ DANGER

HAZARDOUS VOLTAGES ARE PRESENT IN THE CONTROL BOX, OTHER ELECTRICAL COMPONENTS, AND CONNECTIONS BETWEEN THESE COMPONENTS.

Before performing ANY mechanical or electrical maintenance on the equipment, de-energize (disconnect) the main switch supplying power to the equipment; as well as lock and tag the main switch in the de-energized position. Refer to ANSI Z244.1, “Personnel Protection – Lockout/Tagout of Energy Sources”.

Dual speed units incorporate a VFD as well as a Capacitor. Therefore, DO NOT perform ANY mechanical or electrical maintenance within 5 minutes of powering down to allow time for the capacitor inside the VFD to discharge. DO NOT perform any voltage or insulation resistance tests with a meg ohmmeter when the VFD is connected to the electrical circuit.

Only trained and competent personnel should inspect and repair this equipment.

NOTICE

It is the responsibility of the owner/user to install, inspect, test, maintain, and operate a hoist in accordance with ANSI/ASME B30.16, “Safety Standard for Overhead Hoists”, OSHA Regulations and ANSI/NFPA 70, National Electric Code. If the hoist is installed as part of a total lifting system, such as an overhead crane or monorail, it is also the responsibility of the owner/user to comply with the applicable ANSI/ASME B30 volume that addresses that type of equipment.

It is the responsibility of the owner/user to have all personnel that will install, inspect, test, maintain, and operate a hoist read the contents of this manual and applicable portions of ANSI/ASME B30.16, “Safety Standard for Overhead Hoists”, OSHA Regulations and ANSI/NFPA 70, “National Electric Code”. If the hoist is installed as part of a total lifting system, such as an overhead crane, the applicable ANSI/ASME B30 volume that addresses that type of equipment must also be read by all personnel.

If the hoist owner/user requires additional information, or if any information in the manual is not clear, contact Harrington or the distributor of the hoist. Do not install, inspect, test, maintain, or operate this hoist unless this information is fully understood.

A regular schedule of inspection of the hoist in accordance with the requirements of ANSI/ASME B30.16 should be established and records maintained.

1.2 Warning Tags and Labels

The warning tag illustrated below in Figure 1-1 is supplied with each hoist shipped from the factory. If the tag is not attached to your hoist's pendant cord, order a tag from your dealer and install it. Read and obey all warnings attached to this hoist. Tag is not shown actual size.

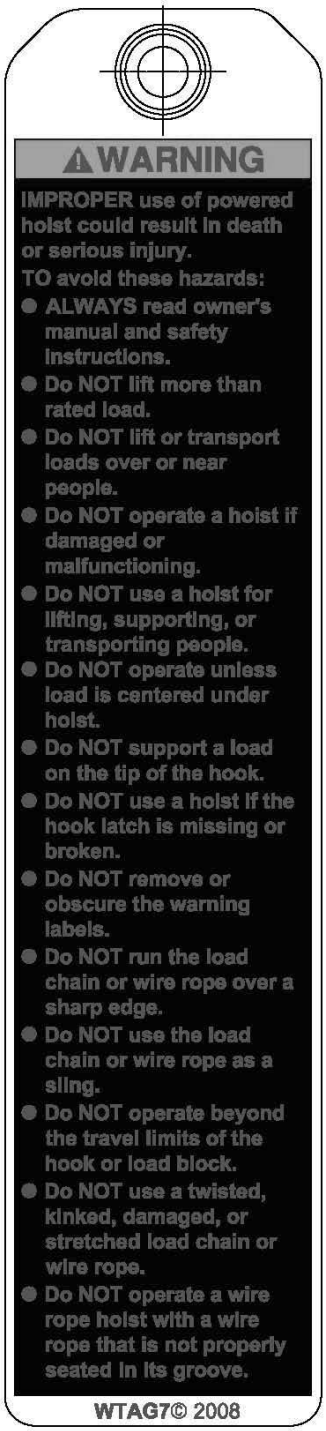

front

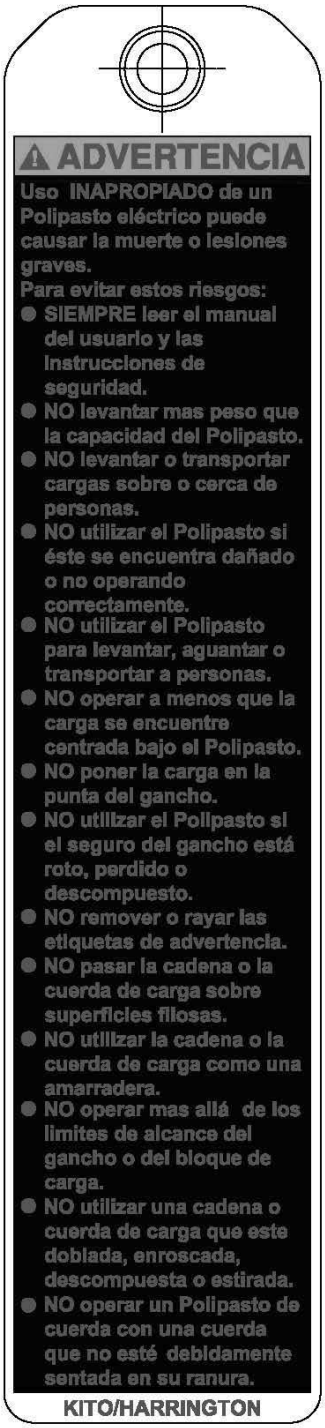

back

Figure 1-1 Warning Tag Attached to Hoist

2.0 Technical Information

2.1 Specifications

Note: This Owners Manual is for the *Enhanced Features Model* ER and NER. This *Enhanced Features Model* is referred to as the ER2 and NER2 in this Owners Manual.

Pendants are shown with optional *Emergency Stop* button.

2.1.1 Product Code

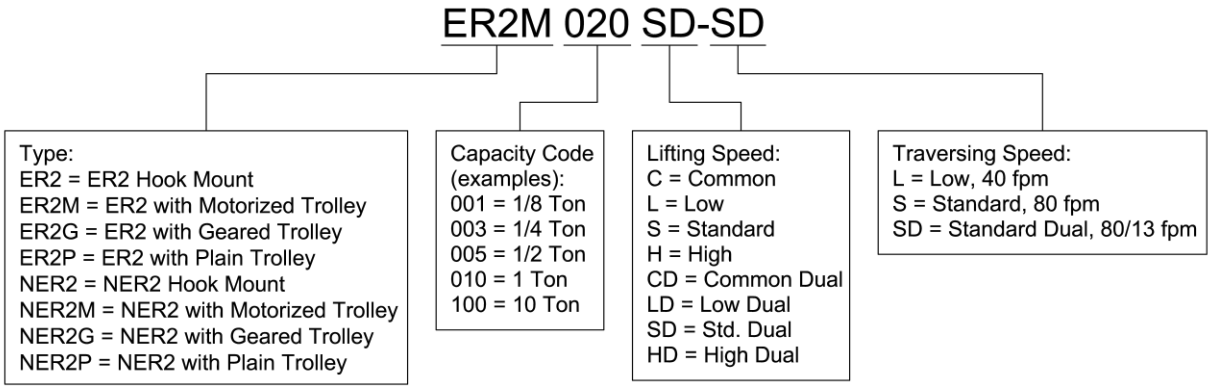

2.1.2 ER2 and NER2 Models - Harrington ER2 series hoists are available in two versions, the ER2 and NER2. These two versions differ with the presence of a mechanical load brake as standard equipment. The ER2 has a mechanical load brake/friction clutch combination while the NER2 has a friction clutch mechanism that provides over winding protection. Refer to Figure 2-1 for the visual differences between the ER2 and NER2.

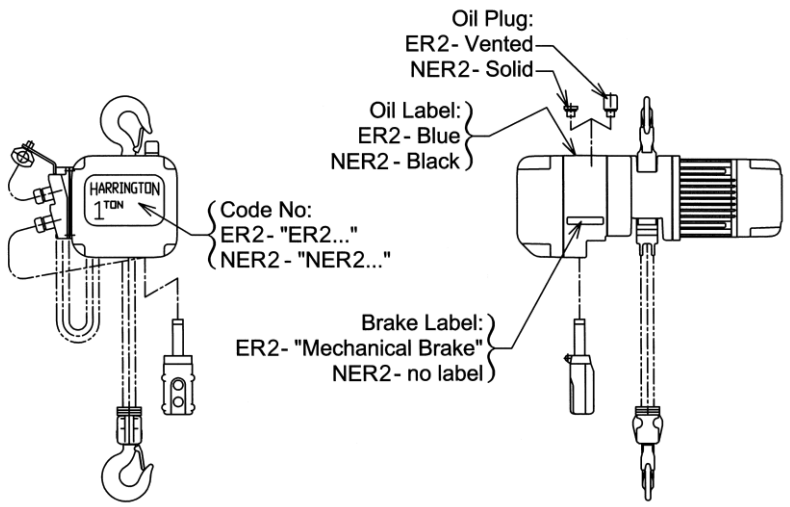

Figure 2-1 Identifying ER2 verses NER2 Models

2.1.3 Operating Conditions and Environment

Temperature range:	-4° to +104°F (-20° to +40°C)
Humidity:	85% or less
Noise Level:	85 dB or less (A scale: measured 1 meter away from electric chain hoist
Enclosure Rating:	Hoist Meets IP55, Pendant Meets IP65
Supply Voltage:	Single Speed Standard: Reconnectable 208/230 & 460V-3-60
	Single Speed Optional: 575V-3-60 or Special Voltages/Frequencies Available
	Dual Speed Standard: 208/230V-3-60 or 460V-3-60
	Dual Speed Optional: 575V-3-60 or Voltages/Frequencies Voltages Available

	Single Speed	**Dual Speed**
Hoist Duty Rating:	ISO M4/M5/M6; ASME H4	
Intermittent Duty Rating:	60% ED 360 starts per hour	40/20% ED 120/240 starts per hour
Short Time Duty Rating:	60 min.	30/10 min.

	Table 2-1 Hoist Specifications										
	Capacity (Ton)	Product Code	Lifting Speed (ft/min)	Motor			Load Chain Wire Diameter (mm) x Chain Fall Lines	Load Sheave Pockets	Net Weight (lbs)		Weight for One Addnl. FT. of Lift (lbs)
				Output (Hp)	Current Draw (amps)						
					208V or 230V	460V			NER	ER	
SINGLE SPEED	1/8	(N)ER2001H	55	0.75	3.4	1.7	4.3 x 1	6	60	62	0.28
	1/4	(N)ER2003S	36	0.75	3.4	1.7	4.3 x 1	6	60	62	0.28
	1/4	(N)ER2003H	53	1.2	4.8	2.5	6.0 x 1	5	79	82	0.54
	1/2	(N)ER2005L	15	0.75	3.4	1.7	6.0 x 1	5	71	79	0.54
	1/2	(N)ER2005S	29	1.2	4.8	2.5	6.0 x 1	5	79	82	0.54
	1	(N)ER2010L	14	1.2	4.8	2.5	7.7 x 1	5	104	110	0.89
	1	(N)ER2010S	28	2.4	8.6	4.2	7.7 x 1	5	119	119	0.89
	1 1/2	(N)ER2015S	18	2.4	8.6	4.2	10.2 x 1	5	159	170	1.6
	2	(N)ER2020C	7	1.2	4.8	2.5	7.7 x 2	5	130	134	1.8
	2	(N)ER2020L	14	2.4	8.6	4.2	10.2 x 1	5	161	174	1.6
	2	(N)ER2020S	28	4.7	16.4	7.9	10.2 x 1	5	201	198	1.6
	2 1/2	(N)ER2025S	22	4.7	16.4	7.9	11.2 x 1	5	227	225	1.9
	3	(N)ER2030C	17	4.7	16.4	7.9	10.2 x2	5	234	234	3.2
	5	(N)ER2050L	11	4.7	16.4	7.9	11.2 x 2	5	289	284	3.8
DUAL SPEED	1/8	(N)ER2001HD	55/9	0.75	3.6	1.8	4.3 x 1	6	60	64	0.28
	1/4	(N)ER2003SD	36/6	0.75	3.6	1.8	4.3 x 1	6	60	64	0.28
	1/4	(N)ER2003HD	53/9	1.2	5.1	2.7	6.0 x 1	5	77	82	0.54
	1/2	(N)ER2005LD	15/2.5	0.75	3.6	1.8	6.0 x 1	5	68	79	0.54
	1/2	(N)ER2005SD	29/5	1.2	5.1	2.7	6.0 x 1	5	77	82	0.54
	1	(N)ER2010LD	14/2.5	1.2	5.1	2.7	7.7 x 1	5	99	108	0.89
	1	(N)ER2010SD	28/4.5	2.4	9.1	4.5	7.7 x 1	5	115	117	0.89
	1 1/2	(N)ER2015SD	18/3	2.4	9.1	4.5	10.2 x 1	5	159	172	1.6
	2	(N)ER2020CD	7/1	1.2	5.1	2.7	7.7 x 2	5	123	132	1.8
	2	(N)ER2020LD	14/2.5	2.4	9.1	4.5	10.2 x 1	5	161	174	1.6
	2	(N)ER2020SD	28/4.5	4.7	17.3	8.3	10.2 x 1	5	196	203	1.6
	2 1/2	(N)ER2025SD	22/3.5	4.7	17.3	8.3	11.2 x 1	5	218	231	1.9
	3	(N)ER2030CD	17/3	4.7	17.3	8.3	10.2 x 2	5	229	238	3.2
	5	(N)ER2050LD	11/2	4.7	17.3	8.3	11.2 x 2	5	280	293	3.8

2.2 Dimensions

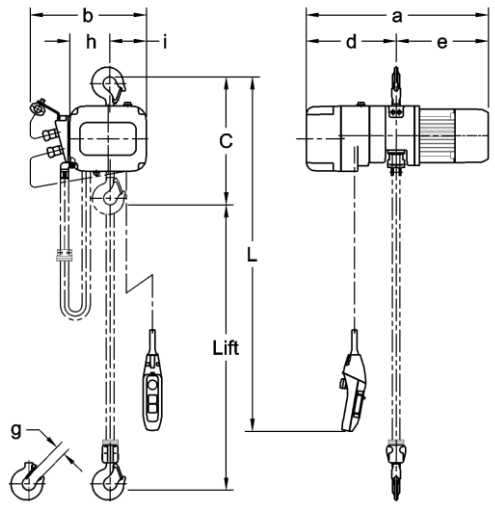

Figure 2-2 Single Speed Hoist Dimensions (See Table 2-3)

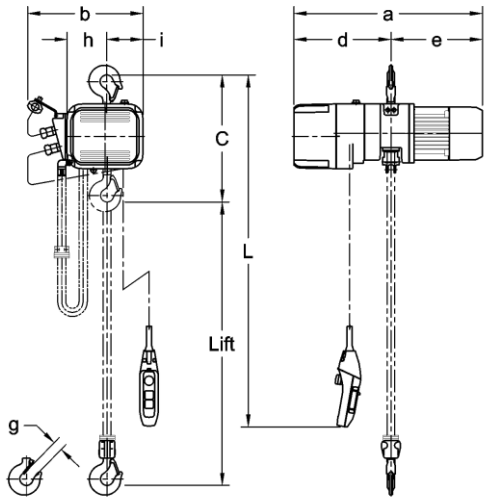

Figure 2-3 Dual Speed Hoist Dimensions (See Table 2-3)

Table 2-2 Hook Dimension*

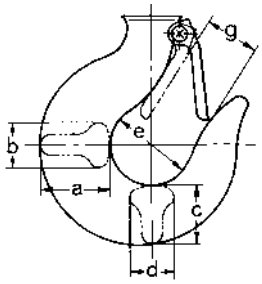

T = Top Hook

B = Bottom Hook

Units = inch

Capacity Code	Hook	a	b	c	d	e	g
001H, 003S, 003H, 005L, 005S	T & B	1.1	0.7	0.9	0.7	1.4	1.1
001HCC, 003SCC	T	1.1	0.7	0.9	0.7	1.4	1.1
	B	0.8	0.5	0.7	0.5	1.4	1.1
010L, 010S	T & B	1.5	0.9	1.2	0.9	1.7	1.2
020C	T & B	1.9	1.1	1.6	1.1	2.0	1.5
015S	T	2.0	1.3	1.7	1.3	2.1	1.5
	B	1.7	1.1	1.5	1.1	1.9	1.4
020L, 020S	T & B	2.0	1.3	1.7	1.3	2.1	1.6
025S	T	2.0	1.3	1.7	1.3	2.4	1.7
	B	2.0	1.3	1.7	1.3	2.1	1.6
030L, 030C	T & B	2.2	1.4	1.9	1.4	2.4	1.8
050L	T & B	2.6	1.7	2.2	1.7	2.5	1.9

*Refer to Section 5.7 for inspection dimensions and limits.

	Table 2-3 Hoist Dimensions														
	Product Code	Minimum Headroom C (in)	L* (ft)	a (in)		b (in)		d (in)		e (in)		g (in)	h (in)	i (in)	
				NER	ER	NER	ER	NER	ER	NER	ER			NER	ER
SINGLE SPEED	(N)ER2001H	13.8	8.2	18.8	22.2	12.6	13.6	8.6	12.0	10.2	10.2	1.1	3.9	3.7	4.6
	(N)ER2003S	13.8	8.2	18.8	22.2	12.6	13.6	8.6	12.0	10.2	10.2	1.1	3.9	3.7	4.6
	(N)ER2003H	14.6	8.2	20.0	23.3	13.7	13.7	9.5	12.8	10.5	10.5	1.1	4.4	4.2	4.2
	(N)ER2005L	14.6	8.2	20.2	23.5	13.7	13.7	9.5	12.8	10.6	10.7	1.1	4.4	4.2	4.2
	(N)ER2005S	14.6	8.2	20.0	23.3	13.7	13.7	9.5	12.8	10.5	10.5	1.1	4.4	4.2	4.2
	(N)ER2010L	16.9	8.2	23.2	24.9	14.8	14.8	11.4	13.1	11.7	11.8	1.2	5.1	4.6	4.6
	(N)ER2010S	16.9	8.2	23.5	25.2	14.8	14.8	11.4	13.1	12.1	12.1	1.2	5.1	4.6	4.6
	(N)ER2015S	20.1	8.2	25.4	29.0	16.8	16.8	12.1	15.6	13.3	13.4	1.4	6.3	5.4	5.4
	(N)ER2020C	27.8	8.2	23.2	24.9	14.8	14.8	11.4	13.1	11.7	11.8	1.5	7.0	2.7	2.7
	(N)ER2020L	22.6	8.2	25.4	29.0	16.8	16.8	12.1	15.6	13.3	13.4	1.6	6.3	5.4	5.4
	(N)ER2020S	23.2	8.2	27.6	30.8	16.8	16.8	13.6	16.8	14.0	14.0	1.6	6.3	5.4	5.4
	(N)ER2025S	24.6	8.2	28.9	32.5	17.5	17.5	13.2	16.8	15.7	15.7	1.6	6.9	5.6	5.6
	(N)ER2030C	32.9	9.2	27.6	30.8	16.8	16.8	13.6	16.8	14.0	14.0	1.8	8.5	3.2	3.2
	(N)ER2050L	33.5	9.2	28.9	32.5	17.5	17.5	13.2	16.8	15.7	15.7	1.9	9.1	3.3	3.3
DUAL SPEED	(N)ER2001HD	13.8	8.2	21.0	22.2	13.6		10.8	12.0	10.2	10.2	1.1	3.9	4.6	
	(N)ER2003SD	13.8	8.2	21.0	22.2	13.6		10.8	12.0	10.2	10.2	1.1	3.9	4.6	
	(N)ER2003HD	14.6	8.2	22.3	23.3	13.7		11.8	12.8	10.5	10.5	1.1	4.4	4.2	
	(N)ER2005LD	14.6	8.2	22.4	23.5	13.7		11.8	12.8	10.6	10.7	1.1	4.4	4.2	
	(N)ER2005SD	14.6	8.2	22.3	23.3	13.7		11.8	12.8	10.5	10.5	1.1	4.4	4.2	
	(N)ER2010LD	16.9	8.2	24.1	24.9	14.8		12.4	13.1	11.7	11.8	1.2	5.1	4.6	
	(N)ER2010SD	16.9	8.2	24.5	25.2	14.8		12.4	13.1	12.1	12.1	1.2	5.1	4.6	
	(N)ER2015SD	20.1	8.2	27.9	29.0	16.8		14.6	15.6	13.3	13.4	1.4	6.3	5.4	
	(N)ER2020CD	27.8	8.2	24.1	24.9	14.8		12.4	13.1	11.7	11.8	1.5	7.0	2.7	
	(N)ER2020LD	22.6	8.2	27.9	29.0	16.8		14.6	15.6	13.3	13.4	1.6	6.3	5.4	
	(N)ER2020SD	23.2	8.2	30.2	30.8	16.8		16.2	16.8	14.0	14.0	1.6	6.3	5.4	
	(N)ER2025SD	24.6	8.2	31.5	32.5	17.5		15.8	16.8	15.7	15.7	1.6	6.8	5.6	
	(N)ER2030LD	TBD	TBD	TBD	TBD	TBD		TBD	TBD	TBD	TBD	TBD	TBD	TBD	
	(N)ER2030CD	32.9	9.2	30.2	30.8	16.8		16.2	16.8	14.0	14.0	1.8	8.5	3.2	
	(N)ER2050LD	33.5	9.2	31.5	32.5	17.5		15.8	16.8	15.7	15.7	1.9	9.1	3.4	

*The "L" dimensions are based on the standard lift of 10 feet.

3.0 Preoperational Procedures

3.1 Gearbox

3.1.1 The gearbox is filled with the correct amount of oil at the time of shipment. The oil level must be verified prior to operation. The ER2 and NER2 hoists have different checking procedures. Refer to Section 6.3 for specific checking procedures.

3.1.2 Refer to Section 6.3 when replacing the gear oil.

3.1.3 All ER2, mechanical load brake equipped hoists, are shipped with a separate air vented oil cap. This vented oil cap must be installed prior to use. To install, remove an existing oil plug and replace with the vented oil cap (refer to Figure 3-1).

3.1.4 There are two oil fill holes located in the top of the gear case on the ER2 hoist. For ER2 coupled to MR2 trolley, there are some flange widths that make it necessary to relocate the oil cap assembly to the other oil fill hole. This will prevent interference with trolley side plate. Refer to Figure 3-1.

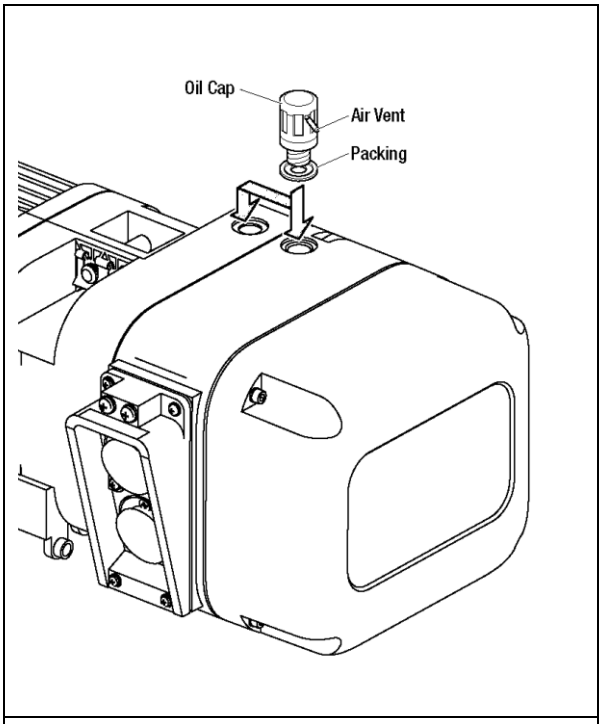

Figure 3-1 Vented Oil Cap Installation

3.2 Chain

3.2.1 The quantity and location of the chain components including cushion rubbers, chain springs, and striker plates depend on the hoist model, capacity, and limits switches. Never operate the hoist with incorrect, missing, or damaged chain components. Refer to the hoist's nameplate, Table 3-1, as well as Figures 3-2, 3-3. Ensure that all chain components are in the correct location and properly installed.

3.2.2 When the hoist is used without a chain container, the free end of the chain is attached to the hoist body as shown in Figure 3-4. Connect the no load end of the chain to Chain Guide A with the End Suspender provided. For 5 ton hoist, connect the no load end of the chain directly to Chain Guide A if Chain Guide A is notched to accept the chain. Make sure the chain remains free of twists and the chain Stopper is installed on the correct link. Refer to Table 3-1 for proper placement of Stopper.

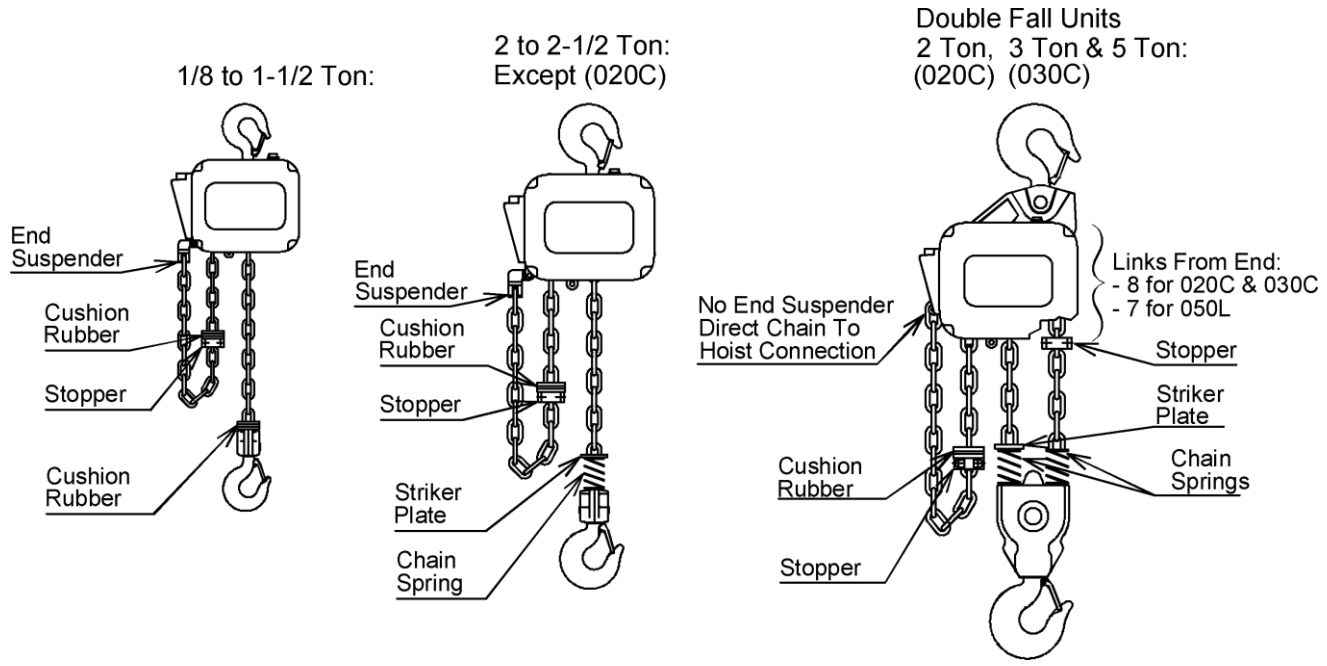

Figure 3-2 Chain Component Arrangement for Single Fall and Double Fall Hoists.

Table 3-1 Chain Stopper Placement

Capacity Code	Without Chain Container	With Chain Container
001H & 003S	21st link from the free end	3rd link from the free end
003H, 005L, 005S, 010L, 010S, 015S, 020C, 020L, 020S, 025S, 030L, 030C, 050L	15th link from the free end	3rd link from the free end

*Tightening torque for the Stopper Bolt: 10 N-m (7 lb-ft)

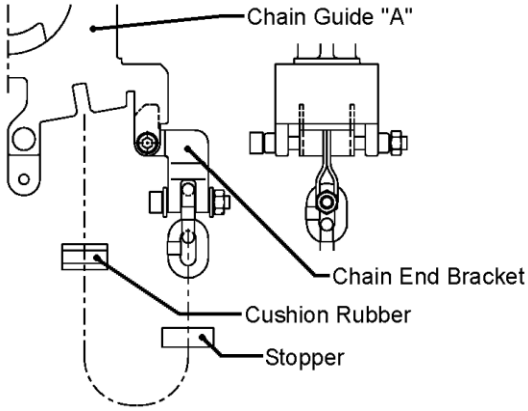

001H, 003S, 003H, 005L, 005S, 010L, 010S, 015S, 020L, 020S, 025S

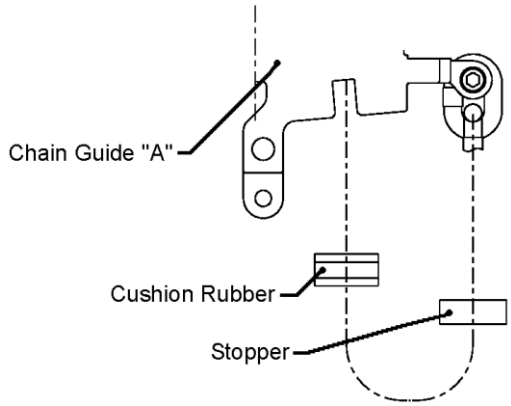

020C, 030C, 050L

Figure 3-3 Attachment of Chain to Hoist Body – No Chain Container

3.2.3 Optional Canvas or Plastic Chain Container - When the optional canvas chain container is selected, fully unfold and install it on the hoist body as shown in Figure 3-4. When installing the optional plastic chain container, pass the socket bolt through the holes in this order: the chain container, the bucket spring, the chain guide A, the bucket spring, and the chain container. Be sure to mount the bucket spring in correct direction as shown in Figure 3-4. The free end of the chain is not attached to the hoist body and the chain stopper is installed on the third link from the free end. To place the chain into the chain container, feed the free end of the chain into the container. Take care to avoid twisting or tangling the chain. NEVER put all the chain into the container at once. Lumped or twisted chain may activate the down limit switch and stop the hoist during lowering.

3.2.4 **⚠ CAUTION** Each chain container indicates the maximum length of the load chain that can be stored in the container. The amount of chain the container must hold is equal to the lift on the hoist. DO NOT use a chain container with a storage capacity less than the lift length on the hoist. If all of the chain cannot be stored in the container, the limit switch will not operate properly.

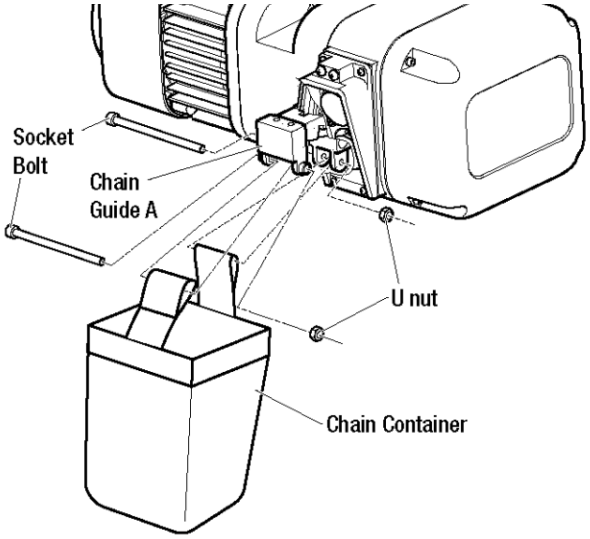

Canvas Chain Container

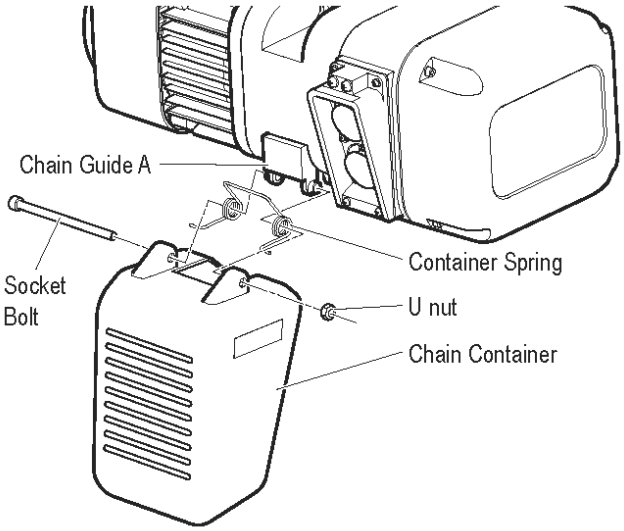

Plastic Chain Container

Figure 3-4 Attachment of Chain Container to Hoist Body

3.2.5 When using an optional steel chain container, refer to the assembly drawing and instructions provided with the container for correct assembly and attachment.

3.2.6 **⚠WARNING** Verify that the load chain is not twisted or tangled prior to operating the hoist. Make sure the bottom hook on 2, 3 and 5 Ton double fall models is not capsized. See Figures 3-5 and 3-6. Correct all chain irregularities before conducting the first hoist operation.

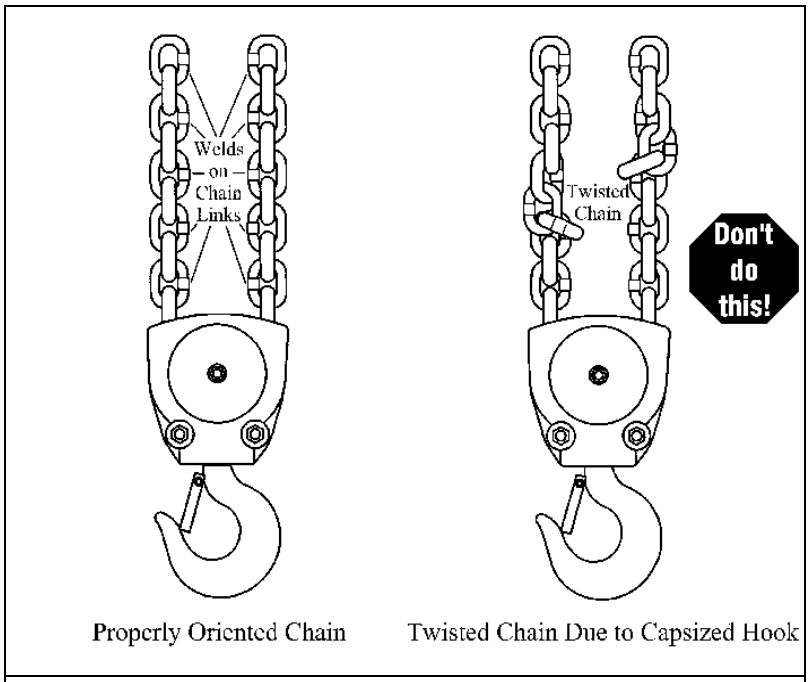

Figure 3-5 Twist in Load Chain – 2, 3 and 5 Ton Double Fall Models

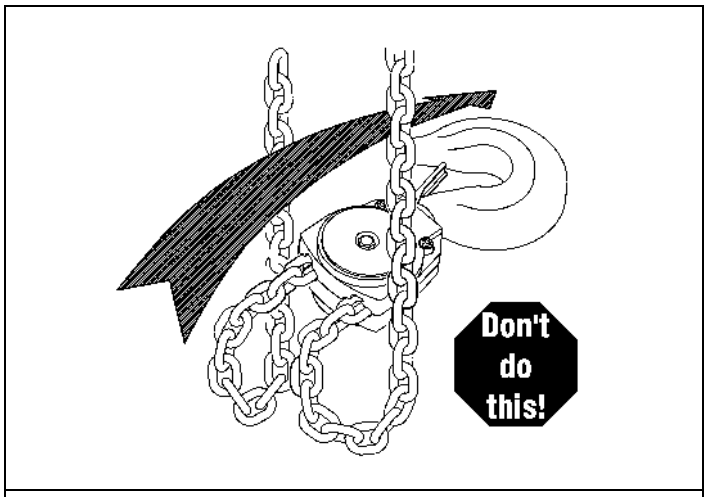

Figure 3-6 Capsized Hook and Chain –Double Fall Models

3.3 Mounting Location

3.3.1 **⚠WARNING** Prior to mounting the hoist ensure that the suspension and the supporting structure are adequate to support the hoist and its loads. If necessary consult a professional that is qualified to evaluate the adequacy of the suspension location and its supporting structure.

3.3.2 **NOTICE** See Section 6.8 for outdoor installation considerations.

3.4 Mounting the Hoist

3.4.1 Manual Trolley - Follow instructions in Owner's Manual provided with the trolley.

3.4.2 Motorized Trolley - Follow instructions in Owner's Manual provided with the trolley.

3.4.3 Hook Mounted to a Fixed Location - Attach the hoist's top hook to the fixed suspension point.

3.4.4 **⚠WARNING** Ensure that the fixed suspension point rests on the center of the hook's saddle and that the hook's latch is engaged.

3.5 Electrical Connections

3.5.1 **⚠CAUTION** Ensure that the voltage of the electric power supply is proper for the hoist or trolley.

3.5.2 **⚠CAUTION** Do NOT apply electronic soft-start control or voltage varying controls to the ER2 or NER2 hoist. Use of such devices may cause the motor brake and other electrical components to malfunction. Variable frequency drives MAY be used with the single speed ER2/NER2 hoists, contact Harrington Hoists, Inc. for more information.

3.5.3 **⚠DANGER** Before proceeding, ensure that the electrical supply for the hoist or trolley has been de-energized (disconnected). Lock out and tag out in accordance with ANSI Z244.1 "Personnel Protection -Lockout/Tagout of Energy Sources".

3.5.4 **⚠DANGER** To avoid a shock hazard, **DO NOT** perform **ANY** mechanical or electrical maintenance on the dual speed (VFD control) trolley or hoist within 5 minutes of de-energizing (disconnecting) the trolley or hoist. This time allows the internal VFD capacitor to safely discharge.

3.5.5 **⚠DANGER** Do NOT remove power to the dual speed (VFD control) hoist or trolley during operation.

3.5.6 **⚠CAUTION** All dual speed hoists are equiped with a VFD. The VFD is used to control the high and low lifting speeds. The speeds come preset from the factory (See Table 3-6). Speed (frequency) can be customized. Refer to Section 3.6.10 for hoist specific speed ranges and instructions.

3.5.7 The following instructions apply when the hoist is hook mounted to a fixed suspension point or installed on a manual trolley. The hoist is controlled by a pendant with two push buttons – one for raising and one for lowering. Refer to the appropriate trolley Owner's Manual if the hoist is installed on a motorized trolley. Special wiring considerations must be taken if the trolley is used with a trolley other than an MR2 model.

Pendant Cord

The Pendant Cord connects to the hoist via an 8-pin (8P) Plug and Socket. Make this connection as follows:

- Refer to Figure 3-7.
- Insert the 8P Plug into the 8P Socket on the hoist and hand-tighten the Lock Ring.
- Attach the Cord Strain Relief Cable to the Cord Support on the bottom of the hoist.

Power Supply Cable - Hoist Connection

The Power Supply Cable connects to the hoist via a 4-pin (4P) Plug and Socket. Make this connection as follows:

- Refer to Figure 3-7.
- Insert the 4P plug of the Power Supply Cable into the 4P Socket on the hoist and hand-tighten the Lock Ring.
- Install the Cable Support Arm (pre-installed on the Power Supply Cable) on to the Socket Holder using the pre-installed Machine Screws and Lock Washers.
- Use care to avoid twisting or kinking the Power Supply Cable.

Power Supply Cable - Installation

If the hoist is hook mounted to a fixed support ensure that the Power Supply Cable is properly installed and supported between the hoist and the electrical power supply.

If the host is installed on a manual trolley, then the Power Supply Cable must be installed along the beam that the trolley runs on. For curved beams a special cable suspension system will be needed, and this instruction does not apply. For straight beams install the Power Supply Cable as follows:

- Install a guide wire system parallel to the beam.
- For a manual trolley the guide wire should be positioned slightly outside the hoist's Cable Support as shown in Figure 3-7.
- Use the Cable Trolleys supplied with the hoist to suspend the Power Supply Cable from the guide wire. Space the Cable Trolleys every 5 feet.

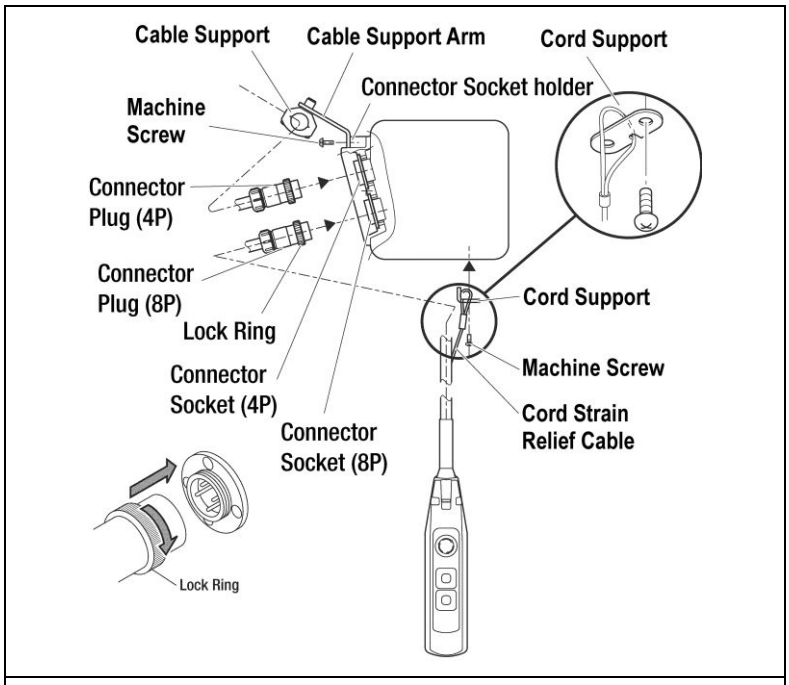

Figure 3-7 Pendant and Power Supply Cable Connections

3.5.8 Connection to Electrical Power Source - The red, blue and black wires of the Power Supply Cable should be connected to an Electric Power Disconnect Switch or Circuit Breaker. This connection should be made so that the hoist is phased properly. Refer to Section 3.7.11 for instructions on how to check for correct power supply phase connection.

3.5.9 Fuse/Breaker Capacity -The hoist's power supply should be equipped with current overload protection such as fuses, which should be selected for 110% to 120% of total listed full load amperage, and should be dual element time-delay fuses. Refer to the motor nameplate for the full load amperage draw.

3.5.10 **⚠ DANGER** Grounding - An improper or insufficient ground connection creates an electrical shock hazard when touching any part of the hoist or trolley. In the Power Supply Cable the ground wire will be either Green with Yellow stripe or solid Green. It should always be connected to a suitable ground connection. Do not paint the trolley wheel running surfaces of the beam as this can affect grounding.

3.6 VFD Setup (Dual Speed Only)

3.6.1 **⚠ DANGER** To avoid a shock hazard, **DO NOT** perform **ANY** mechanical or electrical maintenance on the dual speed (VFD control) trolley or hoist within 5 minutes of de-energizing (disconnecting) the trolley or hoist. This time allows the internal VFD capacitor to safely discharge.

3.6.2 **⚠ WARNING** Do Not remove power to the dual speed (VFD control) hoist or trolley during operation.

3.6.3 All dual speed hoists are equiped with a VFD. The VFD is used to control the high and low lifting speeds. The speeds come preset from the factory (Table 3-6). Speed (frequency) can be customized. Refer to Section 3.6.10 for hoist specific speed ranges and instructions.

3.6.4 The VFD is controled by a Keypad/Display Interface. Refer to Figure 3-8 for Keypad/Display Interface functions and descriptions.

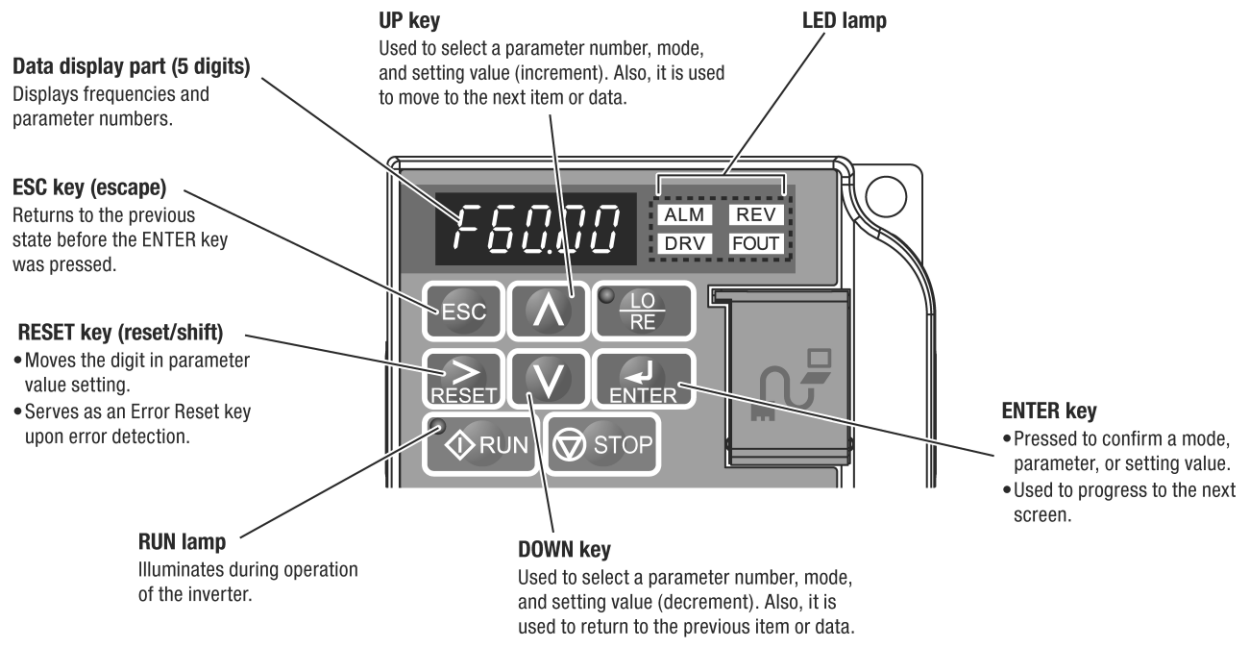

Figure 3-8 VFD Keypad/Display Interface

3.6.5 When power is supplied to the hoist the VFD LED operator display will illuminate as shown Table 3-2.

Table 3-2 LED Operator Display

No	Name	Description
Normal	F00.00 ALM REV DRV FOUT	The frequency command monitor is displayed in the data display part. DRV illuminates.
Error	U01 ALM REV DRV FOUT Example: Main circuit low voltage	The display varies depending on the error. ALM and DRV illuminate.

3.6.6 During operation the data display will exhibit illuminating or blinking data as shown in Figure 3-9.

Illuminating	Blinking
A2-01	A2-01

Figure 3-9 Illuminating/Blinking Display

3.6.7 The digital display uses a seven segment character to form the specific charaters used in the display. Table 3-3 shows the corresponding digital characters to its English eqivalent.

Table 3-3 Digital Character Key

Character	Digital Display	Character	Digital Display	Character	Digital Display	Character	Digital Display
0	0	9	9	I	ι	R	ρ
1	1	A	A	J	ϑ	S	Σ
2	2	B	β	K	τ	T	Γ
3	3	C	X	L	Λ	U	Y
4	4	D	δ	M	ΠΠ	V	ϖ
5	5	E	E	N	N	W	ωω
6	6	F	Φ	O	ο	X	No Display
7	7	G	G	P	Π	Y	Ψ
8	8	H	H	Q	θ	Z	No Display

3.6.8 The LED Lamp display provides hoist status. Table 3-4 shows some of the status displays.

Table 3-4 LED Lamp Display

Lamp	Illuminating	Blinking	Off
ALM	Upon error detection	• Upon detection of minor failure • Upon detection of an OPE (operation error)	Normal
REV	Inputting a reverse rotation command	–	Inputting a forward rotation command
DRV	In the drive mode	–	In the program mode
FOUT	Displaying output frequency (Hz)	–	–
Description in this document	F 0.00 ALM REV DRV OUT	Er-03 ALM REV DRV FOUT	F 0.00 ALM REV DRV OUT

3.6.9 The Run Lamp display provides hoist “RUN” status. Table 3-5 shows the various “RUN” displays.

Table 3-5 Run Lamp

Lamp	Illuminating	Blinking	Short blinking	Off
RUN	During operation	• During deceleration/ stop • Inputting a driving command with the frequency command 0	• During deceleration due to an emergency stop • During deceleration • During a stop due to driving interlock operation	During a stop
Description in this document	RUN	RUN	RUN	RUN

3.6.10 All of the hoists have speed/frequency ranges that can be customized to a specific application. Refer to Table 3-6 for specific hoist speed/frequency ranges. To set custom speeds for an application, follow the procedure listed in Table 3-7.

Table 3-6 VFD Speed & Frequency Ranges

Product Code	Hoist Speed (ft/min)			VFD Frequency (Hz)							
				NER2				ER2			
	Range*	Low	High	Low (d1-01)		High (d1-02)		Low (d1-01)		High (d1-02)	
				230V	460V	230V	460V	230V	460V	230V	460V
(N)ER2001HD	Low	4.5	55	3.2	3.3	57.0	57.0	4.9	3.3	57.5	57.0
	Std	9.0	55	8.3	8.2	57.0	57.0	9.7	7.8	57.5	57.0
(N)ER2003SD	Low	3.0	36	3.2	3.3	57.0	57.0	4.9	3.3	57.5	57.0
	Std	6.0	36	8.3	8.2	57.0	57.0	9.7	7.8	57.5	57.0
(N)ER2003HD	Low	4.3	53	2.6	2.5	53.5	54.0	2.8	2.5	55.0	54.0
	Std	9.0	53	7.3	7.3	53.5	54.0	8.0	7.2	55.0	54.0
(N)ER2005LD	Low	1.2	15	3.2	3.3	57.0	57.0	4.9	3.3	57.5	57.0
	Std	2.5	15	8.3	8.2	57.0	57.0	9.7	7.8	57.5	57.0
(N)ER2005SD	Low	2.3	29	2.6	2.5	53.5	54.0	2.8	2.5	55.0	54.0
	Std	5.0	29	7.3	7.3	53.5	54.0	8.0	7.2	55.0	54.0
(N)ER2010LD	Low	1.1	14	2.6	2.5	53.5	54.0	2.8	2.5	55.0	54.0
	Std	2.5	14	7.3	7.3	53.5	54.0	8.0	7.2	55.0	54.0
(N)ER2010SD	Low	2.2	28	2.3	2.1	53.0	53.5	2.7	3.0	53.0	53.5
	Std	4.5	28	7.3	7.0	53.0	53.5	8.2	7.5	53.0	53.5
(N)ER2015SD	Low	1.4	18	2.3	2.1	53.0	53.5	2.7	3.0	53.0	53.5
	Std	3.0	18	7.3	7.0	53.0	53.5	8.2	7.5	53.0	53.5
(N)ER2020CD	Low	0.5	7.0	2.6	2.5	53.5	54.0	2.8	2.5	55.0	54.0
	Std	1.0	7.0	7.3	7.3	53.5	54.0	8.0	7.2	55.0	54.0
(N)ER2020LD	Low	1.0	14.0	2.3	2.1	53.0	53.5	2.7	3.0	53.0	53.5
	Std	2.5	14.0	7.3	7.0	53.0	53.5	8.2	7.5	53.0	53.5
(N)ER2020SD	Low	2.2	28	2.6	3.0	54.0	55.0	2.8	3.0	52.0	55.0
	Std	4.5	28	7.9	7.7	54.0	55.0	8.0	7.7	52.0	55.0
(N)ER2025SD	Low	1.8	22	2.6	3.0	54.0	55.0	2.8	3.0	52.0	55.0
	Std	3.5	22	7.9	7.7	54.0	55.0	8.0	7.7	52.0	55.0
(N)ER2030LD	Low	TBD	TBD	TBD	TBD	TBD	TBD	TBD	TBD	TBD	TBD
	Std	TBD	TBD	TBD	TBD	TBD	TBD	TBD	TBD	TBD	TBD
(N)ER2030CD	Low	1.4	17	2.6	3.0	54.0	55.0	2.8	3.0	52.0	55.0
	Std	3.0	17	7.9	7.7	54.0	55.0	8.0	7.7	52.0	55.0
(N)ER2050LD	Low	0.9	11	2.6	3.0	54.0	55.0	2.8	3.0	52.0	55.0
	Std	2	11	7.9	7.7	54.0	55.0	8.0	7.7	52.0	55.0

*Low = The minimum and maximum speed/frequency range (12:1 ratio).
Std = The factory standard minimum and maximum speed/frequency range (6:1 ratio).

Table 3-7 Dual Speed Hoist (w/VFD) Speed/Frequency Change Procedure

⚠ CAUTION

- Each dual speed hoist model has a range of available speeds/frequencies (upper and lower limits). Any value outside the range listed in Table 3-6 for your specific hoist is strictly prohibited.
- Speeds must be set such as Low [d1-01] and High [d1-02].
- After parameters are changed, a “no load” operational check must be performed.

Operational Step	VFD Display
1. Energize the hoist.	F 0.00 ALM DRV REV OUT
2. Press ∧ until the “Setup Mode” screen is displayed (blinking).	SrUP
3. Press ENTER to display the parameter setting screen (blinking).	d1-01
4. Press ∧ or ∨ until the desired parameter is displayed (blinking). (Low Speed: d1-01, High Speed: d1-02)	d1-01
5. When you press ENTER, the current setting value is displayed (digit selected blinks). (Example Value: 9 Hz)	009.00
6. Press RESET to move the blinking digit to the desired digit. (Example Value: 9 blinks)	009.00
7. Press ∧ or ∨ until the desired setting is displayed and press ENTER. (Example Value: 8 Hz)	008.00
8. Press ENTER to confirm the new setting.	End
9. The display will automatically return to the parameter screen (blinking). (As in Step 4.)	d1-01
10. Press ESC until the diplay returns to the initial screen. (As in Step 1.)	F 0.00 ALM DRV REV OUT

Table 3-8 Hoist VFD 2-Step/3-Step Infinitely Variable Parameter Setup Procedure

⚠ CAUTION

- Each VFD controlled hoist model has a range of available speeds/frequencies (upper and lower limits). Refer to Table 3-6 for a list of acceptable speeds/frequencies.
- Any value outside the range listed in Table 3-6 for your specific hoist is strictly prohibited.
- Speeds must be set such as Low [d1-01] and High [d1-02].
- After parameters are changed, a "no load" operational check must be performed.

Operational Step	VFD Display
Change Mode to 2 Step or 3 Step.	
1. Press ∧ or ∨ until the "Setup Mode" screen is displayed (blinking).	SrUP
2. Press ENTER to display "d1-01".	d1-01

3. Table 3-6 lists the values that may be changed.

Title	Parameter	Description
Min. Frequency (Hz) – Low Speed	d1-01	Default setting, dependant upon hoist. (Refer to Table 3-7)
Max. frequency (Hz) – High Speed	d1-02	Default setting, dependant upon hoist. (Refer to Table 3-7)
Mode	S1-25	1. Standard 2 Speed (default)
		2. 2 Step Infinitely Variable
		3. 3 Step Infinitely Variable (Requires optional hardware)
Acceleration Time (sec.) (0 to 120 Hz) in 2 or 3 Step Mode.	S1-26	Apply for frequency range between d1-01 and d1-02.
Deceleration Time (sec.) (0 to 120 Hz) in 3 Step Mode.	S1-27	Apply for frequency range between d1-01 and d1-02.

4. Press ESC several times.	ESC

3.6.11 "Hbb" will appear on the dual speed unit's VFD display when the Emergency Stop Button is depressed. Turn the Emergency Stop Button clockwise to unlock the controls and allow hoist operation.

3.7 Preoperational Checks and Trial Operation

3.7.1 **⚠WARNING** Confirm the adequacy of the rated capacity for all slings, chains, wire ropes and all other lifting attachments before use. Inspect all load suspension members for damage prior to use and replace or repair all damaged parts.

3.7.2 **⚠WARNING** Verify and correct all chain irregularities prior to operating the hoist. Refer to Section 3.2.

3.7.3 Measure and record the “k” dimension of all hooks on hoist. See Table 5-4 under Section 5, “Inspection”.

3.7.4 Record the hoist's Code, Lot and Serial Number (from the name plate on the hoist; see Section 10) in the space provided on the cover of this manual.

3.7.5 Ensure that the hoist is properly installed to either a fixed point, or trolley, whichever applies.

3.7.6 If hoist is installed on a trolley, ensure that

- trolley is properly installed on the beam, and
- stops for the trolley are correctly positioned and securely installed on the beam.

3.7.7 Ensure that all nuts, bolts and split pins (cotter pins) are sufficiently fastened.

3.7.8 Pull down on the Pendant and ensure that the Cord Strain Relief Cable takes the force, not the Pendant Cord.

3.7.9 **⚠CAUTION** Check supply voltage before everyday use. If the voltage varies more than 10% of the rated value, electrical devices may not function normally.

3.7.10 Confirm proper operation.

- Before operating read and become familiar with Section 4 - Operation.
- Before operating ensure that the hoist (and trolley) meets the Inspection, Testing and Maintenance requirements of ANSI/ASME B30.16.
- Before operating ensure that nothing will interfere with the full range of the hoist’s (and trolley’s) operation.

3.7.11 **⚠WARNING** The hoist must be connected to the power source such that its direction of operation corresponds to the up-and-down commands issued from the pendant control; i.e. pushing the UP button must cause the hoist to lift the load chain and hook. If the hoist does not operate correctly, shut off and lockout /tagout the main power source to the hoist. Disconnect and switch any two of the three input power leads at the power source to correct the hoist’s motor phasing.

4.0 Operation

4.1 Introduction

⚠ DANGER

DO NOT WALK UNDER A SUSPENDED LOAD

⚠ WARNING

HOIST OPERATORS SHALL BE REQUIRED TO READ THE OPERATION SECTION OF THIS MANUAL, THE WARNINGS CONTAINED IN THIS MANUAL, INSTRUCTION AND WARNING LABELS ON THE HOIST OR LIFTING SYSTEM, AND THE OPERATION SECTIONS OF ANSI/ASME B30.16 and ANSI/ASME B30.10. THE OPERATOR SHALL ALSO BE REQUIRED TO BE FAMILIAR WITH THE HOIST AND HOIST CONTROLS BEFORE BEING AUTHORIZED TO OPERATE THE HOIST OR LIFTING SYSTEM.

HOIST OPERATORS SHOULD BE TRAINED IN PROPER RIGGING PROCEDURES FOR THE ATTACHMENT OF LOADS TO THE HOIST HOOK.

HOIST OPERATORS SHOULD BE TRAINED TO BE AWARE OF POTENTIAL MALFUNCTIONS OF THE EQUIPMENT THAT REQUIRE ADJUSTMENT OR REPAIR, AND TO BE INSTRUCTED TO STOP OPERATION IF SUCH MALFUNCTIONS OCCUR, AND TO IMMEDIATELY ADVISE THEIR SUPERVISOR SO CORRECTIVE ACTION CAN BE TAKEN.

HOIST OPERATORS SHOULD HAVE NORMAL DEPTH PERCEPTION, FIELD OF VISION, REACTION TIME, MANUAL DEXTERITY, AND COORDINATION.

HOIST OPERATORS SHOULD **NOT** HAVE A HISTORY OF OR BE PRONE TO SEIZURES, LOSS OF PHYSICAL CONTROL, PHYSICAL DEFECTS, OR EMOTIONAL INSTABILITY THAT COULD RESULT IN ACTIONS OF THE OPERATOR BEING A HAZARD TO THE OPERATOR OR TO OTHERS.

HOIST OPERATORS SHOULD **NOT** OPERATE A HOIST OR LIFTING SYSTEM WHEN UNDER THE INFLUENCE OF ALCOHOL, DRUGS, OR MEDICATION.

OVERHEAD HOISTS ARE INTENDED ONLY FOR VERTICAL LIFTING SERVICE OF FREELY SUSPENDED UNGUIDED LOADS. DO **NOT** USE HOIST FOR LOADS THAT ARE NOT LIFTED VERTICALLY, LOADS THAT ARE NOT FREELY SUSPENDED, OR LOADS THAT ARE GUIDED.

NOTICE

- Read ANSI/ASME B30.16 and ANSI/ASME B30.10.
- Read the hoist manufacturer's Operating and Maintenance Instructions.
- Read all labels attached to equipment.

The operation of an overhead hoist involves more than activating the hoist's controls. Per the ANSI/ASME B30 standards, the use of an overhead hoist is subject to certain hazards that cannot be mitigated by engineered features, but only by the exercise of intelligence, care, common sense, and experience in anticipating the effects and results of activating the hoist's controls. Use this guidance in conjunction with other warnings, cautions, and notices in this manual to govern the operation and use of your overhead hoist.

4.2 Shall's and Shall Not's for Operation

⚠ WARNING

Improper operation of a hoist can create a potentially hazardous situation which, if not avoided, could result in death or serious injury, and substantial property damage. To avoid such a potentially hazardous situation **THE OPERATOR SHALL:**

- **NOT** operate a damaged, malfunctioning or unusually performing hoist.
- **NOT** operate a hoist until you have thoroughly read and understood Manufacturer's Operating and Maintenance Instructions or Manuals.
- Be familiar with operating controls, procedures, and warnings.
- **NOT** operate a hoist that has been modified without the manufacturer's approval or without certification that it is in conformity with ANSI/ASME B30 volumes.
- **NOT** lift more than rated load for the hoist.
- **NOT** use hoist with twisted, kinked, damaged, or worn load chain.
- **NOT** use the hoist to lift, support, or transport people.
- **NOT** lift loads over people.
- **NOT** operate a hoist unless all persons are and remain clear of the supported load.
- **NOT** operate unless load is centered under hoist.
- **NOT** attempt to lengthen the load chain or repair damaged load chain.
- Protect the hoist's load chain from weld splatter or other damaging contaminants.
- **NOT** operate hoist when it is restricted from forming a straight line from hook to support in the direction of loading.
- **NOT** use load chain as a sling or wrap load chain around load.
- **NOT** apply the load to the tip of the hook or to the hook latch.
- **NOT** apply load unless the load chain is properly seated in its grooves.
- **NOT** apply load if bearing prevents equal loading on all load-supporting chain.
- **NOT** operate beyond the limits of the load chain travel.
- **NOT** leave load supported by the hoist unattended unless specific precautions have been taken.
- **NOT** allow the load chain or hook to be used as an electrical or welding ground.
- **NOT** allow the load chain or hook to be touched by a live welding electrode.
- **NOT** remove or obscure the warnings on the hoist.
- **NOT** operate a hoist on which the safety placards or decals are missing or illegible
- **NOT** operate a hoist unless it has been securely attached to a suitable support.
- **NOT** operate a hoist unless load slings or other approved single attachments are properly sized, and seated in the hook saddle.
- **NOT** use the hoist in such a way that could result in shock or impact loads being applied to the hoist.
- Take up slack carefully – make sure load is balanced and load-holding action is secure before continuing.
- Shut down a hoist that malfunctions or performs unusually and report such malfunction.
- Make sure hoist limit switches function properly.
- Warn personnel before lifting or moving a load.
- Warn personnel of an approaching load.

⚠ CAUTION

Improper operation of a hoist can create a potentially hazardous situation which, if not avoided, could result in minor or moderate injury, or property damage. To avoid such a potentially hazardous situation **THE OPERATOR SHALL:**

- Maintain a firm footing or be otherwise secured when operating the hoist.
- Check brake function by tensioning the hoist prior to each lift operation.
- Use hook latches. Latches are to retain slings, chains, etc. under slack conditions only.
- Make sure the hook latches are closed and not supporting any parts of the load.
- Make sure the load is free to move and will clear all obstructions.
- Avoid swinging the load or hook.
- Make sure hook travel is in the same direction as shown on controls.
- Inspect the hoist regularly, replace damaged or worn parts, and keep appropriate records of maintenance.
- Use the hoist manufacturer's recommended parts when repairing the unit.
- Lubricate load chain per hoist manufacturer's recommendations.
- **NOT** use the hoist load limiting or warning device to measure load.
- **NOT** use limit switches as routine operating stops. They are emergency devices only.
- **NOT** allow your attention to be diverted from operating the hoist.
- **NOT** allow the hoist to be subjected to sharp contact with other hoists, structures, or objects through misuse.
- **NOT** adjust or repair the hoist unless qualified to perform such adjustments or repairs.

4.3 Hoist Controls

4.3.1 For hoists mounted to motorized trolleys follow the control instruction included in the trolley's Owner's Manual.

4.3.2 Emergency Stop Button – Press the Emergency Stop Button to perform an emergency stop and lock-out of hoist motion controls or to reset the VFD as shown in Figure 4-1. Turn the Emergency Stop Button clockwise to unlock the controls and allow hoist operation. “Hbb” will appear on the dual speed unit’s VFD display when the Emergency Stop Button is depressed.

4.3.3 Single Speed Pendant Control – When using the pendant control depress the UP button to raise the hoist load chain/hook or the DOWN button to lower the hoist load chain/hook as shown in Figure 4-1. To stop motion release the buttons.

4.3.4 Dual Speed Pendant Control – Pendant controls supplied with dual speed hoists have two step control buttons. For low speed depress the button to the first step and for high speed depress the button fully to the second step. Use the UP button to raise the hoist load chain/hook or the DOWN button to lower the hoist load chain/hook as shown in Figure 4-1. To stop motion release the buttons.

4.3.5 **⚠ CAUTION** Make sure the motor completely stops before reversing direction.

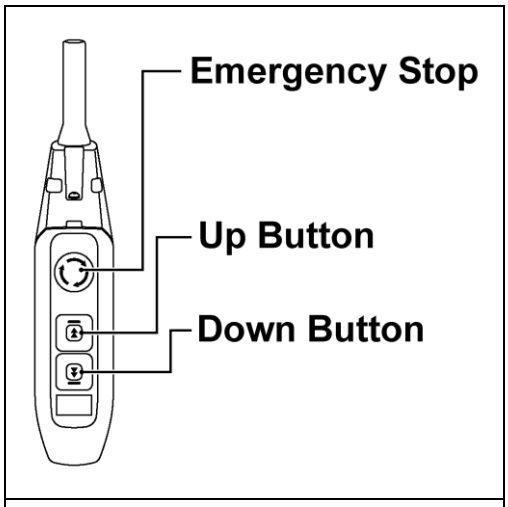

Figure 4-1 Push Button Pendant Control

5.0 Inspection

5.1 General

5.1.1 The inspection procedure herein is based on ANSI/ASME B30.16. The following definitions are from ANSI/ASME B30.16 and pertain to the inspection procedure below.

- **Designated Person** – a person selected or assigned as being competent to perform the specific duties to which he/she is assigned.
- **Qualified Person** – a person who, by possession of a recognized degree or certificate of professional standing, or who, by extensive knowledge, training, and experience, has successfully demonstrated the ability to solve or resolve problems relating to the subject matter and work.
- **Normal Service** – that distributed service which involves operation with randomly distributed loads within the rated load limit, or uniform loads less than 65% of rated load for not more than 25% of the time.
- **Heavy Service** – that service which involves operation within the rated load limit which exceeds normal service.
- **Severe Service** – that service which involves normal or heavy service with abnormal operating conditions.

5.2 Inspection Classification

5.2.1 Initial Inspection – prior to initial use, all new, altered, or modified hoists shall be inspected by a designated person to ensure compliance with the applicable provisions of this manual.

5.2.2 Inspection Classification – the inspection procedure for hoists in regular service is divided into two general classifications based upon the intervals at which inspection should be performed. The intervals in turn are dependent upon the nature of the critical components of the hoist and the degree of their exposure to wear, deterioration, or malfunction. The two general classifications are herein designated as FREQUENT and PERIODIC, with respective intervals between inspections as defined below.

5.2.3 FREQUENT Inspection – visual examinations by the operator or other designated personnel with intervals per the following criteria:

- Normal service – monthly
- Heavy service – weekly to monthly
- Severe service – daily to weekly
- Special or infrequent service – as recommended by a qualified person before and after each occurrence.

5.2.4 PERIODIC Inspection – visual inspection by a designated person with intervals per the following criteria:

- Normal service – yearly
- Heavy service – semiannually
- Severe service – quarterly
- Special or infrequent service – as recommended by a qualified person before the first such occurrence and as directed by the qualified person for any subsequent occurrences.

5.3 Frequent Inspection

5.3.1 Inspections should be made on a FREQUENT basis in accordance with Table 5-1, "Frequent Inspection." Included in these FREQUENT Inspections are observations made during operation for any defects or damage that might appear between Periodic Inspections. Evaluation and resolution of the results of FREQUENT Inspections shall be made by a designated person such that the hoist is maintained in safe working condition.

Table 5-1 Frequent Inspection
All functional operating mechanisms for maladjustment and unusual sounds.
Operation of limit switch and associated components
Hoist braking system for proper operation
Hooks in accordance with ANSI/ASME B30.10
Hook latch operation
Load chain in accordance with Section 5.7
Load chain reeving for compliance with Section 3.2 and 6.5

5.4 Periodic Inspection

5.4.1 Inspections should be made on a PERIODIC basis in accordance with Table 5-2, "Periodic Inspection." Evaluation and resolution of the results of PERIODIC Inspections shall be made by a designated person such that the hoist is maintained in safe working condition.

5.4.2 For inspections where load suspension parts of the hoist are disassembled, a load test per ANSI/ASME B30.16 must be performed on the hoist after it is re-assembled and prior to its return to service.

Table 5-2 Periodic Inspection
Requirements of frequent inspection.
Evidence of loose bolts, nuts, or rivets.
Evidence of worn, corroded, cracked, or distorted parts such as load blocks, suspension housing, chain attachments, clevises, yokes, suspension bolts, shafts, gears, bearings, pins and rollers.
Evidence of damage to hook retaining nuts or collars and pins, and welds or rivets used to secure the retaining members.
Evidence of damage or excessive wear of load and idler sheaves.
Evidence of excessive wear on motor or load brake.
Electrical apparatus for signs of pitting or any deterioration of visible controller contacts.
Evidence of damage of supporting structure or trolley, if used.
Function labels on pendant control stations for legibility.
Warning label properly attached to the hoist and legible (see Section 1.2).
End connections of load chain.

5.5 Occasionally Used Hoists

5.5.1 Hoists that are used infrequently shall be inspected as follows prior to placing in service:

- Hoist Idle More Than 1 Month, Less Than 1 Year: Inspect per FREQUENT Inspection criteria in Section 5.3.
- Hoist Idle More Than 1 Year: Inspect per PERIODIC Inspection criteria in Section 5.4.

5.6 Inspection Records

5.6.1 Dated inspection reports and records should be maintained at time intervals corresponding to those that apply for the hoist's PERIODIC interval per Section 5.2.4. These records should be stored where they are available to personnel involved with the inspection, maintenance, or operation of the hoist.

5.6.2 A long range chain inspection program should be established and should include records of examination of chains removed from service so a relationship can be established between visual observation and actual condition of the chain.

5.7 Inspection Methods and Criteria

5.7.1 This section covers the inspection of specific items. The list of items in this section is based on those listed in ANSI/ASME B30.16 for the Frequent and Periodic Inspection. In accordance with ANSI/ASME B30.16, these inspections are not intended to involve disassembly of the hoist. Rather, disassembly for further inspection would be required if frequent or periodic inspection results so indicate. Such disassembly and further inspection should only be performed by a qualified person trained in the disassembly and re-assembly of the hoist.

Table 5-3 Hoist Inspection Methods and Criteria

Item	Method	Criteria	Action
Functional operating mechanisms.	Visual, Auditory	Mechanisms should be properly adjusted and should not produce unusual sounds when operated.	Repair or replace as required.
Limit Switches (upper and lower)	Function	Proper operation. Actuation of limit switch should stop hoist.	Repair or replace as required.
Limit Lever Assembly	Visual, Function	Lever should not be bent or significantly worn and should be able to move freely.	Replace.
Braking System Operation	Function	Braking distance with rated capacity should not exceed 3% of the lifting speed (approximately two chain links).	Repair or replace as required.
Hooks - Surface Condition	Visual	Should be free of significant rust, weld splatter, deep nicks, or gouges.	Replace.
Hooks - Fretting wear	Measure	The "u" and "t" dimensions should not be less than discard value listed in **Table 5-4.**	Replace.
Hooks - Stretch	Measure	The "k" dimension should not be greater than 1.05 times that measured and recorded at the time of purchase (See **Section 3.7**). If recorded "k" values are not available for hooks when new, use nominal "k" values from **Table 5-4.**	Replace.
Hooks - Bent Shank or Neck	Visual	Shank and neck portions of hook should be free of deformations.	Replace.

Table 5-3 Hoist Inspection Methods and Criteria			
Item	**Method**	**Criteria**	**Action**
Hooks - Swivel Bearing	Visual, Function	Bearing parts and surfaces should not show significant wear, and should be free of dirt, grime and deformations. Hook should rotate freely with no roughness.	Clean/lubricate, or replace as required.
Hooks - Yoke Assembly	Visual	Should be free of significant rust, weld splatter, nicks, and gouges. Holes should not be elongated. The difference between dimensions “a” (vertical) and “b” (horizontal) must be within .020” (0.5mm), refer to **Figure 5-1**. Fasteners should not be loose, and there should be no gap between mating parts.	Measure, tighten, or replace as required.
Hooks – Top Shaft Retainer Clip	Visual	Should not have any deformation, abrasion, or damage. Refer to **Figure 5-2**.	Replace.
Hooks - Idle Sheave and Axle (Bottom Hook on Double Fall Hoist)	Visual, Function	Pockets of Idle Sheave should be free of significant wear. Idle Sheave surfaces should be free of nicks, gouges, dirt, and grime. Bearing parts and surfaces of Idle Sheave and Axle should not show significant wear. Idle Sheave should rotate freely with no roughness or significant free play.	Clean/lubricate, or replace as required.
Hooks - Hook Latches	Visual, Function	Latch should not be deformed. Attachment of latch to hook should not be loose. Latch spring should not be missing and should not be weak. Latch movement should not be stiff - when depressed and released latch should snap smartly to its closed position.	Replace.
Load Chain - Surface Condition	Visual	Should be free of rust, nicks, gouges, dents and weld splatter. Links should not be deformed, and should not show signs of abrasion. Surfaces where links bear on one another should be free of significant wear.	Replace.
Load Chain - Pitch and Wire Diameter	Measure	The “P" dimension should not be greater than maximum value listed in **Table 5-5.** The “d" dimension should not be less than minimum value listed in **Table 5-5.**	Replace. Inspect Load Sheave (and Idle Sheave for double fall hoist).
Load Chain - Lubrication	Visual, Auditory	Entire surface of each chain link should be coated with lubricant and should be free of dirt and grime. Chain should not emit cracking noise when hoisting a load.	Clean/lubricate (see **Section 6.0**).
Load Chain - Reeving	Visual	Chain should be reeved properly through Load Sheave (and Idle Sheave for double fall hoist) - refer to **Section 6.5**. Chain, Chain Springs, Cushion Rubbers, Striker Plates, and Stoppers should be installed properly - refer to **Section 3.2**.	Reeve/Install chain properly.

Table 5-3 Hoist Inspection Methods and Criteria			
Item	**Method**	**Criteria**	**Action**
Load Chain – Connection Yoke Chain Pin (Double Reeved Hoists Only)	Measure	The Connection Yoke Chain Pin should not have and apparent deformation. The "d" dimension should not be less than the discard value listed in **Table 5-6**.	Replace.
Cushion Rubber	Visual	Should be free of significant deformation.	Replace.
Chain Springs	Visual	Chain springs should not be deformed or compressed. Refer to **Table 5-9** for Chain Spring dimensions.	Replace.
Chain Guide	Visual	Chain Guide should be free of significant wear. Chain Guide surfaces should be free of deformation by nicks, gouges, and abrasion. Refer to **Figure 5-3**.	Replace.
Chain Container (optional)	Visual	Container should not be damaged. Brackets should not be deformed or missing.	Replace.
Housing and Mechanical Components	Visual, Auditory, Vibration, Function	Hoist components including load blocks, suspension housing, chain attachments, clevises, yokes, suspension bolts, shafts, gears, bearings, pins and rollers should be free of cracks, distortion, significant wear and corrosion. Evidence of same can be detected visually or via detection of unusual sounds or vibration during operation.	Replace.
Gaskets and Sealing Enclosures	Visual	Gaskets and sealing enclosures must be in good condition and installed properly to preserve the IP rating of the hoist.	Replace.
Bolts, Nuts and Rivets	Visual, Check with Proper Tool	Bolts, nuts and rivets should not be loose.	Tighten or replace as required.
Electromagnetic Brake Assembly	Measure, Visual	The electromagnetic motor brake gap is directly related to brake disk wear. As the disk wears, the brake gap will increase. The brake gap/wear dimension should not be more than discard value listed in **Table 5-7.** Bolts and screws should not be loose.	Tighten bolts and screws as required or replace Brake Assembly. Note: DO NOT attempt to adjust or dis-assemble the Brake Assembly.
Hub Joint	Visual	Hub Joint should have no apparent deformation and abrasion. Must be fully seated. Refer to **Figure 5-4**.	Replace. Note: Electromagnetic Brake Assembly may also need to be replaced.
V Ring	Visual	The V Ring should not be worn or show any abnormality. It should be well lubricated. Refer to **Figure 5-5** and **Section 6.1.7.**	Clean/lubricate or replace as required.

Table 5-3 Hoist Inspection Methods and Criteria			
Item	**Method**	**Criteria**	**Action**
Contactor Contacts	Visual	Contacts should be free of significant pitting or deterioration. On hoists equipped with Count/Hour Meter check the contactor cycles – refer to **Section 6.1**.	Replace.
VFD (Dual Speed only)	Visual, Function	There should be no fault codes (Reference **Section 3.6**.)	Replace as needed.
Load Sheave	Visual	Pockets of Load Sheave should be free of significant wear. Refer to **Table 5-8** for Load Sheave wear dimensions.	Replace.
Pendant - Housing	Visual	Pendant housing should be free of cracks and mating surfaces of parts should seal without gaps.	Replace.
Pendant - Wiring	Visual	Wire connections to switches in pendant should not be loose or damaged.	Tighten or repair
Pendant - Switches	Function	Depressing and releasing push-buttons should make and break contacts in switch contact block and result in corresponding electrical continuity or open circuit. Push-buttons should be interlocked either mechanically or electrically to prevent simultaneous energization of circuits for opposing motions (e.g. up and down).	Repair or replace as necessary.
Pendant - Cord	Visual, Electrical Continuity	Surface of cord should be free from nicks, gouges, and abrasions. Each conductor in cord should have 100% electrical continuity even when cord is flexed back-and-forth. Pendant Cord Strain Relief Cable should absorb the entire load associated with forces applied to the pendant.	Replace.
Pendant - Labels	Visual	Labels denoting functions should be legible.	Replace.
Warning Labels	Visual	Warning Labels should be affixed to the hoist (see **Section 1.2**) and they should be legible.	Replace.
Hoist Capacity Label	Visual	The label that indicates the capacity of the hoist should be legible and securely attached to the hoist.	Replace.
Nameplates	Visual	The nameplates that indicate the hoist model, speed and motor data should be legible and securely attached to the hoist.	Replace.

Table 5-4 Top Hook & Bottom Hook Dimensions

"k" Measured When New:

Top: _____

Bottom: _____

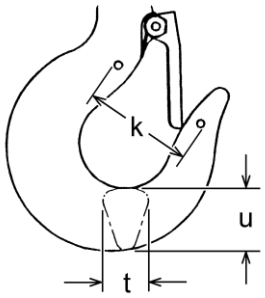

Capacity Code	Nominal "k" Dimension* inch (mm)	"u" Dimension inch (mm)		"t" Dimension inch (mm)	
		Standard	Discard	Standard	Discard
001H, 003S, 003H, 005L, 005S	1.77 (45.0)	0.93 (23.5)	0.88 (22.3)	0.69 (17.5)	0.65 (16.6)
010L, 010M, 010S	1.97 (50.0)	1.22 (31.0)	1.16 (29.5)	0.89 (22.5)	0.84 (21.4)
015S	2.36 (60.0)	1.44 (36.5)	1.37 (34.7)	1.04 (26.5)	0.99 (25.2)
020C	2.46 (62.5)	1.57 (40.0)	1.42 (36.0)	1.14 (29.0)	1.02 (26.0)
020L, 020M, 020S, 025S	2.72 (69.0)	1.71 (43.5)	1.63 (41.3)	1.24 (31.5)	1.18 (29.9)
030L, 030C	2.87 (73.0)	1.87 (47.5)	1.78 (45.1)	1.36 (34.5)	1.29 (32.8)
050L	3.27 (83.0)	2.20 (56.0)	2.09 (53.2)	1.67 (42.5)	1.59 (40.4)

*These values are nominal since the dimension is not controlled to a tolerance. The **"k"** dimension should be measured when the hook is new - this becomes a reference measurement. Subsequent measurements are compared to this reference measurement in order to determine hook deformation/stretch. See Table 5-3, "Hooks - Stretch".

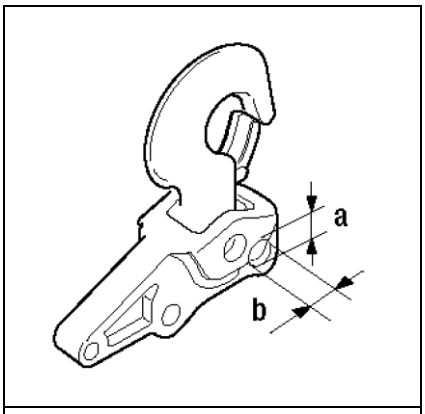

Figure 5-1 Hook Yoke Assembly

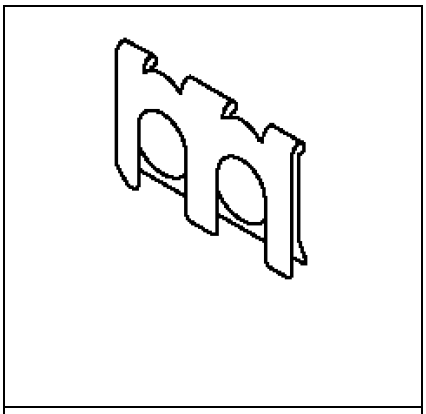

Figure 5-2 Shaft Retainer Clip

Table 5-5 Chain Wear Dimensions

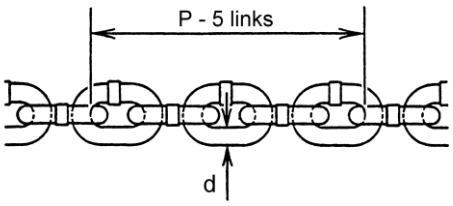

Capacity Code	"P" Dimension inch (mm)		"d" Dimension inch (mm)	
	Standard	Discard	Standard	Discard
001H, 003S	2.38 (60.5)	2.46 (62.5)	0.17 (4.3)	0.15 (3.9)
003H, 005L, 005S	3.31 (84.0)	3.41 (86.5)	0.24 (6.0)	0.21 (5.4)
010L, 010S, 020C	4.25 (108.0)	4.38 (111.2)	0.30 (7.7)	0.27 (6.9)
015S, 020L, 020S, 030C	5.63 (143.0)	5.80 (147.2)	0.40 (10.2)	0.36 (9.2)
025S, 030L, 050L	6.18 (157.0)	6.37 (161.7)	0.44 (11.2)	0.40 (10.1)

Table 5-6 Chain Pin Wear Dimensions

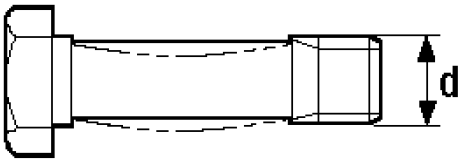

Capacity Code	"d" - inch (mm)	
	Standard	Discard
020C	0.31(8.0)	.30 (7.6)
030C	0.43 (10.8)	0.41 (10.3)
050L	0.51 (12.9)	0.48 (12.3)

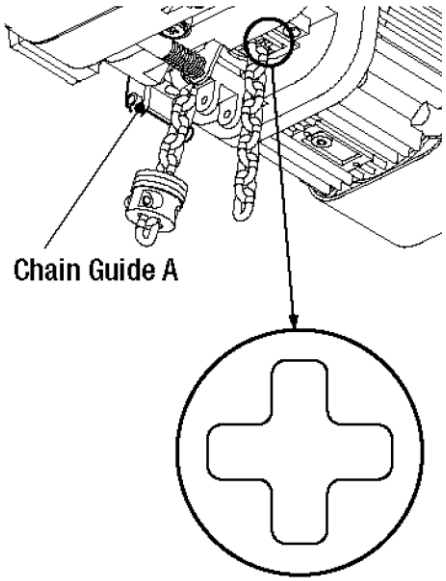

Figure 5-3 Chain Guide "A"

Table 5-7 Motor Brake Wear/Gap Dimensions

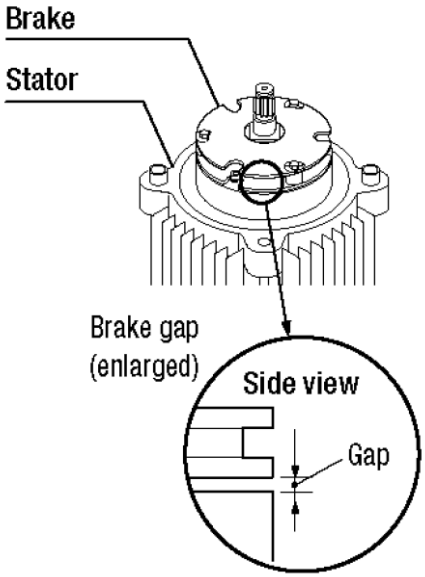

Hoist Speed	Capacity Code	"Gap" Dimension - inch (mm)
		Discard
Single	001H to 020L	0.030 (0.75)
	020S to 050L	0.043 (1.10)
Dual	001HD, 003SD, 005LD	0.024 (0.60)
	003HD, 005SD to 020LD	0.016 (0.40)
	020SD to 050LD	0.020 (0.50)

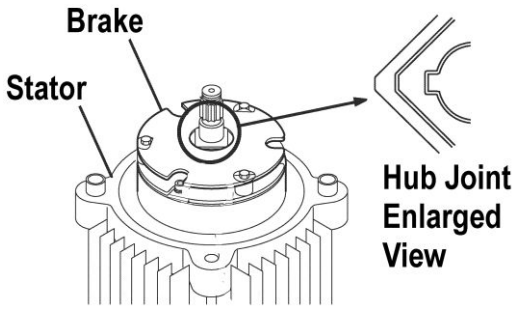

Figure 5-4 Hub Joint

Note: Hub Joint shown for 0.75HP motor. All other motors use splined Hub Joint.

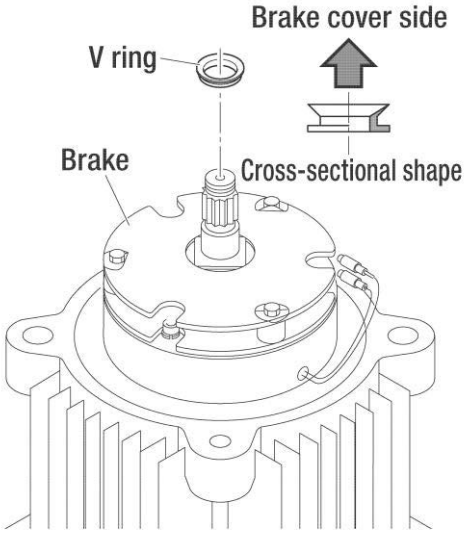

Figure 5-5 V Ring

Table 5-8 Load and Idle Sheave Wear Dimensions

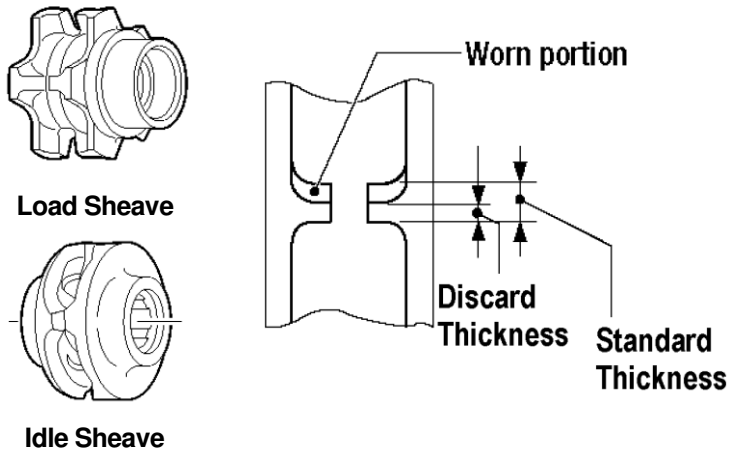

Capacity Code	"Thickness" - inch (mm)	
	Standard	Discard
001H, 003S, 003H	0.06 (1.5)	0.04 (1.0)
005L, 005S	0.12 (3.0)	0.08 (2.0)
010L, 010S, 020C	0.18 (4.5)	0.12 (3.0)
015S, 020L, 020S, 030C	0.26 (6.5)	0.17 (4.3)
025S, 030L, 050L	0.29 (7.3)	0.19 (4.9)

Table 5-9 Chain Spring Length Dimensions

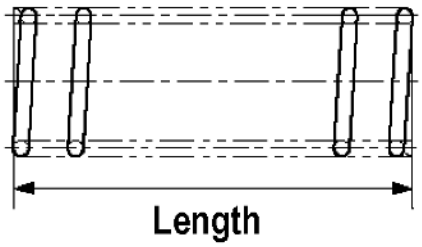

Capacity Code	"Length" - inch (mm)	
	Standard	Discard
020C	3.94 (100)	3.74 (95)
020L	2.76 (70)	2.64 (67)
020S	3.35 (85)	3.19 (81)
025S	2.95 (75)	2.83 (72)
030L	TBD	TBD
030C	3.35 (85)	3.19 (81)
050L	2.95 (75)	2.83 (72)

6.0 Maintenance and Handling

6.1 Count/Hour Meter

A count/hour function is included in all NER2/ER2 hoists. A Count/Hour Meter is included in the single speed hoists and a count/hour function is one of the VFD parameters in the dual speed hoists.

6.1.1 Single Speed – The Count/Hour (C/H) Meter located on the electrical control panel records the hoist's "ON" time and number of starts. To view these values, press the button on the C/H Meter one time. The display will then show a total of 3 values. The first value will show an "H" and a 5 digit number which is the hoist's total "ON" time (up and down) in hours (item "1" in Figure 6-1). After 3 seconds, the display will automatically change to a 6 digit number which is the number of starts of the hoists "DOWN" contactor, through 999,999 starts (item "2" in Figure 6-1). After 3 seconds, the display will automatically change to a 4 digit number prefaced by a "C". This is the number of hoist starts through 9,999,000,000 (item "3" in Figure 6-1).

The example in Figure 6-1 is as follows:

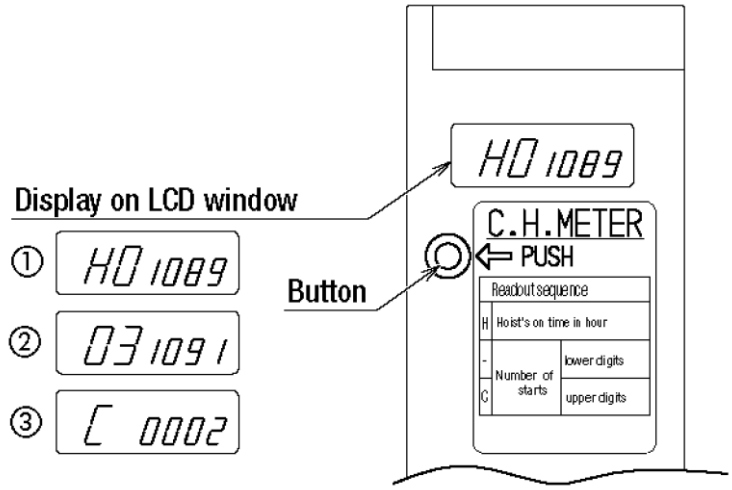

- Item "1" – Operating Hours: 1,089 hours
- Item "3" and "2" – Number of Starts: 2,031,091 starts

Figure 6-1 Count/Hour Meter

6.1.2 Contactor – The C/H Meter can be used in conjunction with the amount of jogging to estimate when the contactor(s) should be replaced. Jogging is when the pendant control buttons are pressed quickly and repetitively to move the hook in small increments. Refer to Table 6-1.

Table 6-1 Criteria for Recommended Contactor Replacement

Jogging During Normal Operation		Change Contactor After: (starts)
Rating	**Approximate Jogging Frequency**	
Low	Jogging is rare.	1,000,000
Medium	During 25% of operations/lifts.	500,000
High	During 50% or more of operations/lifts.	200,000

6.1.3 Dual Speed – On dual speed models, the VFD has Count/Hour functions built into the parameters. Refer to Table 6-2 for parameter identification. Refer to Table 6-3 for Count/Hour access procedure.

Table 6-2 VFD Count/Hour Parameter Identification

Parameter	Name	Discription
U7-01	Number of Starts (Higher Order)	The number of starts in the **down** direction x 1,000. Up to 10,000 units are displayed. Display of “1” = 1,000 starts. Display of “10,000” = 10,000,000 starts
U7-02	Number of Starts (Lower Order)	The number of starts in the **down** direction under 1,000 starts (1 to 999). One start will register a “1” in the display. When 1,000 starts are reached, the value of U7-01 is incremented by 1 and the value of U7-02 is reset to 0.
U7-03	Hours of Operation	The number of hours of operation in both the **up** and **down** directions. One hour will register a “1” in the display. Up to 65535 hours are displayed.

The example using Table 6-2:

- U7-01 displays “81”, U7-02 displays “567”, U7-03 displays “122”
- Number of Starts (down) = 81,567
- Number of Operated Hours = 122

Table 6-3 VFD Count/Hour Access Procedure

Operational Step	VFD Display
1. Energize the hoist.	F 0.00 ALM REV DRV OUT
2. Press ∧ until the “Monitor” screen is displayed (blinking).	Mon
3. Press ENTER to display the parameter setting screen an then press ESC to move from “01” to “U1”.	U1-01
4. Press ∧ or ∨ until the display reads “U7” (left value blinking).	U7-01
5. Press RESET and ∧ or ∨ to select the specific “Monitor” parameter (right vlaue blinking). (Example: U7-03 –Hours of Operation)	U7-03
6. Press ENTER to display the current parameter value. (Example: 75 Hours)	00075
7. Press ESC until the diplay returns to the initial screen. (As in Step 1.)	F 0.00 ALM REV DRV OUT

6.1.4 Gear Oil – The C/H Meter can be used in conjunction with the average load lifted by the hoist to estimate when the gear oil should be changed. Refer to Table 6-4.

Table 6-4 Criteria for Recommended Gear Oil Replacement		
Loading During Normal Operation		Change Gear Oil After: (hours)
Rating	Average % of Rated Capacity	
Light	0 to 33%	360
Medium	33 to 67%	240
Heavy	67 to 100%	120

6.1.5 Electromagnetic Brake – The C/H Meter can be used to determine when the Electromagnetic Brake should be monitored or replaced. Refer to **Table 6-5.**

- When 1 Million starts have been achieved, inspect brake gap referring to Table 6.5 criteria.
- When 2 Million starts have been achieved, replace brake assembly regardless of brake gap.

Table 6-5 Criteria for Electromagnetic Brake Replacement	
Condition of Electromagnetic Brake Gap (Ref. **Table 5-7** for Gap Wear Dimension)	**Action**
Brake gap is less than 50% of the limit.	Check the Brake at every 200,000 starts.
Brake gap reaches 50 to 100% of the limit.	Check the Brake at every 100,000 starts until the brake gap reaches at the limit gap.
Brake gap reaches the limit.	Replace whole Brake

6.1.6 Hook and Yoke – The C/H Meter can be used to determine when the Top/Bottom Hook and Yoke should be replaced. Refer to **Table 6-6.**

Table 6-6 Criteria for Top/Bottom Hook and Yoke Replacement	
Rate of Loading	**Number of Starts to replace Hook and Yoke**
Light - The hoist is mostly used with a light load. Rated capacity rarely applied.	Every 2 million starts.
Medium – The hoist is mostly used with a medium load. Rated capacity frequently applied.	Every 1.5 million starts.
Heavy – The hoist is mostly used with a heavy load. Rated capacity frequently applied.	Every 1 million starts.
Ultra-Heavy – Rated capacity constantly applied.	Every 1 million starts.

6.1.7 V Ring – The C/H Meter can be used to determine when the V Ring should be lubricated. Several grams of MOLITHERM No. 2 grease should be applied to the V Ring every 200 hours of operation.

6.1.8 You are encouraged to use the Count/Hour Meter in conjunction with your experience with the hoist's application and usage to develop a history upon which to gage and fine tune your maintenance program for the hoist.

6.2 Lubrication – Load Chain, Hooks and Suspension

6.2.1 Load Chain

- For longer life, the load chain should be lubricated.
- The load chain lubrication should be accomplished after cleaning the load chain with an acid free cleaning solution.

- Apply Harrington Hoist, Inc. lubricating grease (Part No. ER2CS1951) or an equivalent to industrial general lithium grease, NLGI No. 0, to the bearing surfaces of the load chain links as indicated by the shaded areas in Figure 6-2. Also apply the grease to the areas of the load chain (shaded areas in Figure 6-2) that contact the load sheave. Insure that the grease is applied to the contact areas in the load sheave pockets.
- Machine or gear oil (grade ISO VG 46 or 68 oil or equivalent) may be used as an alternative lubricant but must be applied more frequently.

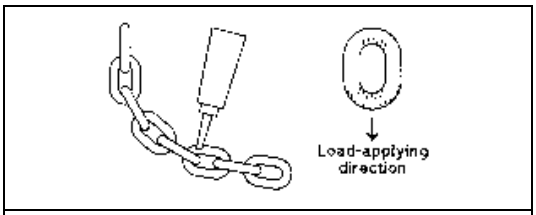

Figure 6-2 Chain Grease Application

- The chain should be lubricated every 3 months (more frequently for heavier usage or severe conditions).
- For dusty environments, it is acceptable to substitute a dry lubricant.

6.2.2 Hooks and Suspension Components:

- Hooks - Bearings should be cleaned and lubricated at least once per year for normal usage. Clean and lubricate more frequently for heavier usage or severe conditions.
- Suspension Pins - Lubricate at least twice per year for normal usage; more frequently for heavier usage or severe conditions.

6.3 Lubrication - Gearbox

6.3.1 **⚠ CAUTION** The ER2 (with mechanical load brake/friction clutch) uses different gear oil than the NER2 (with friction clutch). DO NOT use any oil or quantity other than that listed below. New hoists are prefilled with the correct type and amount of oil.

6.3.2 **DETERMINING OIL LIFE** - Refer to Section 6.1.3 when estimating gear oil life based on operations.

6.3.3 **NER2 OIL LEVEL** – For hoists equipped with a Friction Clutch, the oil level is checked by removing the oil plug on the side of the hoist as shown in Figure 6-3 for NER2 hoists. The oil level should be just below the hole when the hoist is level.

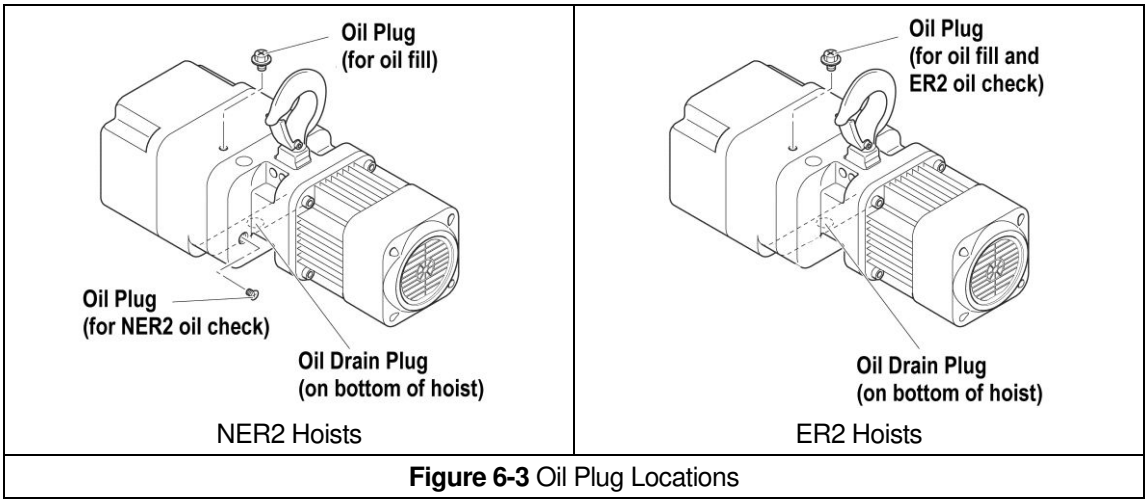

Figure 6-3 Oil Plug Locations

6.3.4 **ER2 OIL LEVEL** – For hoists equipped with a Mechanical Load Brake/Friction Clutch, the oil level is checked through the oil check hole at the top of the hoist. **DO NOT** remove the oil plug exposing the oil level check hole on the side of the hoist. The oil level will be above the hole and will leak out. A dip stick should be used to check the oil level through the top hole as shown in the in Figure 6-3 for ER2 hoists. Reference Table 6-7 for check distances from the top of the hoist body.

Table 6-7 ER (Mechanical Load brake Equipped) Gear Oil Check Distances

Capacity Code	Check Distance (inches)	Check Distance (millimeters)
001H, 003S	2.95	75
003H, 005L, 005S	3.94	100
010L, 010S, 020C	3.94	100
015S, 020L, 020S, 030C	4.72	120
025S, 030L, 050L	5.12	130

6.3.5 **REPLACING OIL** – Change gear oil at least once every 5 years. The oil should be changed more frequently depending on the hoist's usage and operating environment. Refer to Section 6.1.3. Follow the procedure below for replacing the gearbox oil for your hoist:

- To drain the current oil from the hoist remove "Oil Plug" on top of the hoist and the "Oil Drain plug" on the bottom of the hoist. Allow the old oil to drain completely. Refer to Figure 6-4 for oil plug locations.
- **NOTICE** Dispose of the used oil in accordance with local regulations.

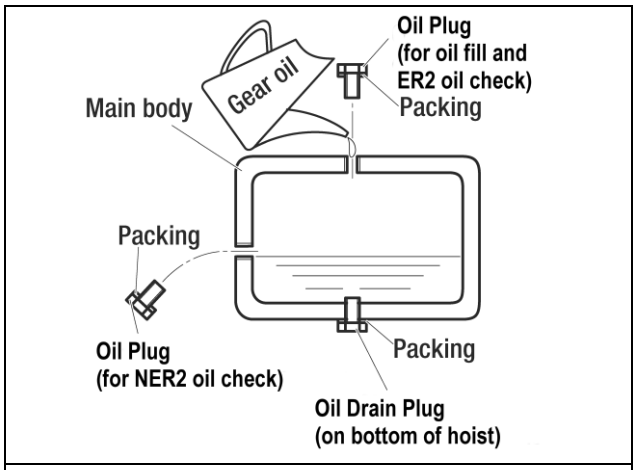

Figure 6-4 Oil Filling Diagram

- Ensure that the oil plugs for the oil level check holes and the drain hole are reinstalled and secured into the hoist body.
- Refill the gear case with the correct quantity and type of new oil or until the oil level is within the range shown in Table 6-7. Refer to Figure 6-4. Note that the NER2 & ER2 models have different oil quantity requirements.

Table 6-8 Amount of Gear Oil				
Capacity Code	Quarts		Liters	
	NER2	ER2	NER2	ER2
001H, 003S	0.55	0.72	0.52	0.68
005L	0.57	0.87	0.54	0.82
003H, 005S	0.57	0.95	0.54	0.90
010L, 020C	0.66	1.11	0.62	1.05
010S	0.72	1.16	0.68	1.10
015S, 020L	1.37	2.11	1.30	2.00
020S, 030C	2.01	2.64	1.90	2.50
025S, 030L, 050L	2.01	2.85	1.90	2.70

- **WARNING** Using an incorrect type/grade of gearbox oil or the wrong quantity of oil may prevent the friction clutch from working properly and may affect the ability of the hoist to hold the load. Refer to the following for correct types/grades of gearbox oil:

  NER2 Gear Oil:
  - Harrington standard: Bonnoc M260 (NIPPON OIL); Harrington Part Numbers:
    - ER1BS1855 – 1 Quart
    - ER1CS1855 – 2 ½ Gallons
  - Acceptable equivalent: Meropa 320 (TEXACO)
  - Acceptable equivalent: Meropa 320 (CALTEX)

  ER2 Gear Oil:
  - Harrington standard: Farm Gear B (NIPPON OIL); Harrington Part Numbers:
    - 7019801 – 1 Quart
    - 7019802 – 2 ½ Gallons

6.4 Motor Brake

6.4.1 The motor brake on the NER2/ER2 hoist is not adjustable.

6.4.2 Refer to Section 5.7 and Table 5-7 for Brake Gap/Wear criteria.

6.5 Load Chain

6.5.1 Lubrication and Cleaning – refer to Section 6.2.

6.5.2 Load Chain Replacement:

1) **CAUTION** The hoist must be properly powered and operational in order to perform the following procedures.

2) **WARNING** Be certain that the replacement chain is obtained from Harrington Hoists, Inc. and is the exact size, grade and construction as the original chain. The new load chain must have an odd number of links so that both its end links have the same orientation. If the load chain is being replaced due to damage or wear out, destroy the old chain to prevent its reuse.

3) **CAUTION** When replacing load chain, check for wear on mating parts, i.e. Load Sheave, Chain Guides and Idle Sheaves, and replace parts if necessary.

4) Remove all chain components including the Bottom Hook Set Assembly, Stoppers, Cushion Rubbers, Chain Springs, Striker Plates, Chain Pin and End Wire (or End Suspender) from the chain for reuse on new chain. Inspect and replace any damaged or worn parts.

5) Using a C-link, attach the new chain to the end link of the old chain on the no-load side. The end link of the new load chain should be connected so that the welded portions of the load chain's standing links are oriented to the outside as they pass over the sheave. Refer to Figure 6-5.

6) Operate the hoist down to move the chain though the hoist body. Stop when a sufficient amount of new chain is accumulated on the load side.

7) Single fall hoists - Attach the chain components (step 4 above) to the chain. Refer to Section 3.2 for the proper locations.

8) Double falls (020C, 030C, 050L) - Feed the end link on the load side of the new chain through the required chain components (step 4 above) and the bottom hook's Idle Sheave. Attach the remaining chain components to the chain referring to Section 3.2 for the proper locations. Connect the end link to the top connection yoke with the chain pin, slotted nut, and cotter pin. Ensure that chain remains free of twists. Refer to Section 3.2.6.

9) **⚠WARNING** Make sure Stoppers, Cushion Rubbers, Chain Springs and Striker Plates are properly installed. Refer to Section 3.2.

10) After installation has been completed, perform steps outlined in Section 3.7, "Preoperational Checks and Trial Operation".

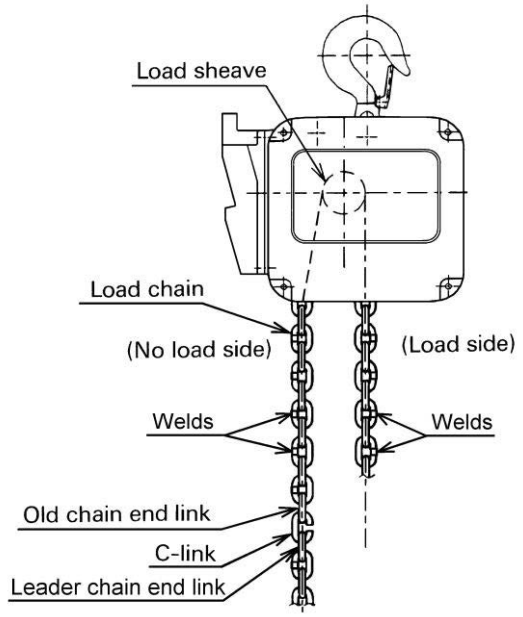

Figure 6-5 Chain Replacement

6.6 Friction Clutch and Mechanical Load Brake with Friction Clutch

6.6.1 Friction Clutch (NER2 Models) – If abnormal operation or slippage occurs do NOT attempt to disassemble or adjust the Friction Clutch. Replace the worn or malfunctioning Friction Clutch as an assembly with a new, factory adjusted part.

6.6.2 Mechanical Load Brake with Friction Clutch (ER2 Models) – If abnormal operation or slippage occurs do NOT attempt to disassemble or adjust the Mechanical Load Brake with Friction Clutch. Replace the worn or malfunctioning Mechanical Load Brake with Friction Clutch as an assembly with a new, factory adjusted part.

6.7 Storage

6.7.1 ER2 models with vented oil cap assemblies should be stored with the cap oriented up to prevent oil leakage.

6.7.2 The storage location should be clean and dry.

6.8 Outdoor Installation

6.8.1 The hoist/trolley should be covered when not in use.

6.8.2 The hoist/trolley MUST BE inspected and maintained according to the 'Severe Service' Inspection Classification. **Refer to Section 5.0.**

6.8.3 When reinstalling the control cover, the gasket MUST BE in good condition and installed properly to preserve the IP55 rating of the hoist.

6.8.4 When using a steel chain container, remove the plug to allow for the drainage of pooling water. When using a plastic chain container, drill a 1/8" hole in the plastic to allow for drainage. Canvas chain containers are not recommended for outdoor use.

6.8.5 Possibility of corrosion on components of the hoist/trolley increases for installations where salt air and high humidity are present. For installations where temperature variations introduce condensation/corrosion into the hoist, more frequent lubrication may be required.

6.8.6 NEMA 4 Pendants are recommended for outdoor use.

6.8.7 Refer to **Section 2.1.3** for allowable environmental conditions.

6.9 Operational Environment

6.9.1 Non-conforming environment

A non-conforming environment is defined as one with any or all of the following.

- Explosive gases or vapor.
- Organic solvents or volatile powder
- Excessive amounts of powder and dust of general substances
- Excessive amount of acids or salts.

7.0 Troubleshooting

WARNING

HAZARDOUS VOLTAGES ARE PRESENT IN THE HOIST AND IN CONNECTIONS BETWEEN COMPONENTS.

Before performing ANY maintenance on the equipment, de-energize the supply of electricity to the equipment, and lock and tag the supply device in the de-energized position. Refer to ANSI Z244.1, "Personnel Protection – Lockout/Tagout of Energy Sources."

To avoid a shock hazard, **DO NOT** perform **ANY** mechanical or electrical maintenance on the dual speed (or VFD control) hoist within 5 minutes of de-energizing (disconnecting) the trolley or hoist. This time allows the internal VFD capacitor to safely discharge.

Only trained and competent personnel should inspect and repair this equipment.

NOTICE

Do Not perform "withstand voltage" test or "insulation resistance" measurement (megger) with the VFD connnected.

Do Not remove power to the hoist or trolley during operation.

Do Not connect power to the output of the VFD.

When handling VFD provide ESD protection.

Table 7-1 Troubleshooting Guide

Symptom	Cause	Remedy
Hoist moving in wrong direction	Power supply reversed phased	Switch 2 of the 3 power supply cord wires at the power source. (Refer to Section 3.7.11 for instructions on how to check for correct power supply phase connection.)
	Improper electrical connections	Refer to wiring diagram and check all connections.
Hoist will not operate	Loss of power	Check circuit breakers, switches, fuses, and connections on power lines/cable.
	Wrong voltage or frequency	Check voltage and frequency of power supply against the rating on the nameplate of the motor.
	Hoist overloaded	Reduce load to within rated capacity of hoist.
	Motor overheated and thermal overload protector has tripped	See Trouble Shooting Problem "Motor or brake overheating".
	Improper, loose, or broken wire in hoist electrical system	Shut off power supply, check wiring connections on hoist control panel and inside push-button pendant.
	Brake does not release	Check motor brake coil for continuity. Replace brake if needed.

Table 7-1 Troubleshooting Guide		
Symptom	**Cause**	**Remedy**
Hoist will not operate (continued)	Faulty magnetic contactor	Check coil for open or short circuit. Check all connections in the control circuit. Check for open contactors. Replace as needed.
	Faulty VFD (dual speed only)	Check fault codes (Reference Section 3.6). Reset VFD by pressing the Emergency Stop Button on pendant. Replace as needed.
	Faulty Interface Board	Replace Interface Board.
	Emergency Stop Depressed on Push Button Pendant Control	“Hbb” will appear on the dual speed unit’s VFD display when the Emergency Stop Button is depressed. Turn the Emergency Stop Button clockwise to unlock the controls and allow hoist operation.
	Defect in control transformer	Check transformer coil for signs of overheating. Disconnect transformer and check for open winding.
	Motor burned out	Replace motor frame/stator, shaft/rotor, and any other damaged parts.
Hoist lifts but will not lower	Down circuit open	Check circuit for loose connections. Check down side of limit switch for malfunction.
	Broken conductor in pendant cord	Check the continuity for each conductor in the cable. If one is broken, replace entire cable.
	Faulty magnetic contactors	Check coils for open or short circuit. Check all connections on motor circuit. Check for burned contacts. Replace as needed.
	Faulty VFD (dual speed only)	Check fault codes (Reference Section 3.6). Reset VFD by pressing Emergency Stop Button on pendant. Replace as needed.
	Faulty switch in pendant	Check electrical continuity. Check electrical connections. Replace or repair as needed.
Hoist lowers but will not lift	Hoist overloaded	Reduce load to within rated capacity of hoist.
	Low voltage in hoist's power supply	Determine cause of low voltage and bring to within plus or minus 10% of the voltage specified on the motor nameplate. The voltage should be measured at the hoist contactor.
	Up circuit open	Check circuit for loose connections. Check up side of limit switch for malfunction.
	Broken conductor in pendant cord	Check the continuity of each conductor in the cable. If one is broken, replace entire cable.
	Faulty magnetic contactor	Check coils for open or short circuit. Check all connections on motor circuit. Check for burned contacts. Replace as needed.
	Faulty VFD (dual speed only)	Check fault codes (Reference Section 3.6). Reset VFD by pressing Emergency Stop Button on pendant. Replace as needed.
	Faulty switch in pendant	Check electrical continuity. Check electrical connections. Replace or repair as needed.
	Faulty friction clutch	Replace.

Table 7-1 Troubleshooting Guide		
Symptom	**Cause**	**Remedy**
Hoist will not lift rated load or does not have the proper lifting speed	Hoist overloaded	Reduce load to within rated capacity.
	Low voltage in hoist's power supply	Determine cause of low voltage and bring to within plus or minus 10% of voltage specified on the motor nameplate. The voltage should be measured at the hoist contactor.
	Brake drags/chatters	Check VFD for fault codes. Replace VFD or Interface Board if needed.
	Faulty friction clutch	Replace.
	Faulty VFD (dual speed only)	Check fault codes (Reference Section 3.6). Reset VFD by pressing Emergency Stop Button on pendant. Replace as needed.
Load drifts excessively when hoist is stopped	Motor brake not holding	Check brake for proper “Brake Gap” dimension. (Reference Table 5-7). Replace if needed.
	Mechanical Load brake not holding (ER2 only)	Replace as needed. (ER2 only, NER2 has no load brake.)
	Faulty VFD (dual speed only)	Check fault codes (Reference Section 3.6). Reset VFD by pressing Emergency Stop Button on pendant. Replace as needed.
Motor or brake overheating	Excessive load	Reduce load to within rated capacity of hoist.
	Excessive duty cycle	Reduce frequency of lifts.
	Wrong voltage or frequency	Check voltage and frequency of power supply against the rating on the nameplate on the motor.
	Brake drags/chatters	Check VFD for fault codes. Replace VFD or Interface Board if needed.
	Extreme external heating	Above an ambient temperature of 140°F, the frequency of hoist operation must be reduced to avoid overheating of the motor. Special provisions should be made to ventilate the hoist or otherwise shield it from the heat.
Hoist operates intermittently	Collectors making poor contact	Check movement of spring loaded arm, weak spring, connections, and shoe. Replace as needed.
	Contactor contacts arcing	Check for burned contacts. Replace as needed.
	Loose connection in circuit	Check all wires and terminals for bad connections. Replace as needed.
	Broken conductor in Pendant Cord	Check for intermittent continuity in each conductor the Pendant Cord. Replace entire Pendant Cord if continuity is not constant.
	Faulty VFD (dual speed only)	Check fault codes (Reference Section 3.6). Reset VFD by pressing Emergency Stop Button on pendant. Replace as needed.

8.0 Warranty

All products sold by Harrington Hoists, Inc. are warranted to be free from defects in material and workmanship from date of shipment by Harrington for the following periods:

1 year – Electric and Air Powered Hoists (excluding (N)ER2 Enhanced Features Models and EQ/SEQ Models), Powered Trolleys, Powered Tiger Track Jibs and Gantries, Crane Components, Below the Hook Devices, Spare / Replacement Parts

2 years – Manual Hoists & Trolleys, Beam Clamps

3 years – (N)ER2 Enhanced Features Hoists, EQ/SEQ Hoists, and RY Hoists

5 years – Manual Tiger Track Jibs and Gantries, TNER, EQ/SEQ, and RY Pull - Rotor Motor Brakes

10 years – (N)ER2 "The Guardian" Smart Brake

The product must be used in accordance with manufacturer's recommendations and must not have been subject to abuse, lack of maintenance, misuse, negligence, or unauthorized repairs or alterations.

Should any defect in material or workmanship occur during the above time period in any product, as determined by Harrington Hoist's inspection of the product, Harrington Hoists, Inc. agrees, at its discretion, either to replace (not including installation) or repair the part or product free of charge and deliver said item F.O.B. Harrington Hoists, Inc. place of business to customer.

Customer must obtain a Return Goods Authorization as directed by Harrington or Harrington's published repair center prior to shipping product for warranty evaluation. An explanation of the complaint must accompany the product. Product must be returned freight prepaid. Upon repair, the product will be covered for the remainder of the original warranty period. Replacement parts installed after the original warranty period will only be eligible for replacement (not including installation) for a period of one year from the installation date. If it is determined there is no defect, or that the defect resulted from causes not within the scope of Harrington's warranty, the customer will be responsible for the costs of returning the product.

Harrington Hoists, Inc. disclaims any and all other warranties of any kind expressed or implied as to the product's merchantability or fitness for a particular application. Harrington will not be liable for death, injuries to persons or property or for incidental, contingent, special or consequential damages, loss or expense arising in connection with the use or inability whatever, regardless of whether damage, loss or expense results from any act or failure to act by Harrington, whether negligent or willful, or from any other reason.

9.0 Parts List

When ordering Parts, please provide the Hoist code number, lot number and serial number located on the Hoist nameplate (see fig. below).

Reminder: Per sections 1.1 and 3.7.4 to aid in ordering Parts and Product Support, record the Hoist code number, lot number and serial number in the space provided on the cover of this manual.

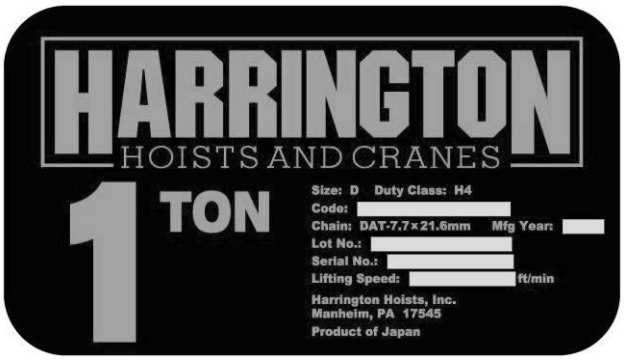

ER2/NER2 Series Nameplate

The parts list is arranged into the following sections:

Section	Page
9.1 Housing and Motor Parts	52
9.2 Gearing Parts	56
9.3 Hook and Chain Parts	60
9.4 Electric Parts (Single Speed)	78
9.5 Electric Parts (Dual Speed)	84
9.6 Power Supply and Pendant Parts	90

In the column "Parts Per Hoist" a designator is used for parts that apply only to a particular model or option. Refer to Section 2 for hoist model numbers and additional descriptions. The designators are:

S = Single Speed
D = Dual Speed
F = NER Models
M = ER Models
2V = 208/230 Volt Models
4V = 460 Volt Models

9.1 Housing and Motor Parts

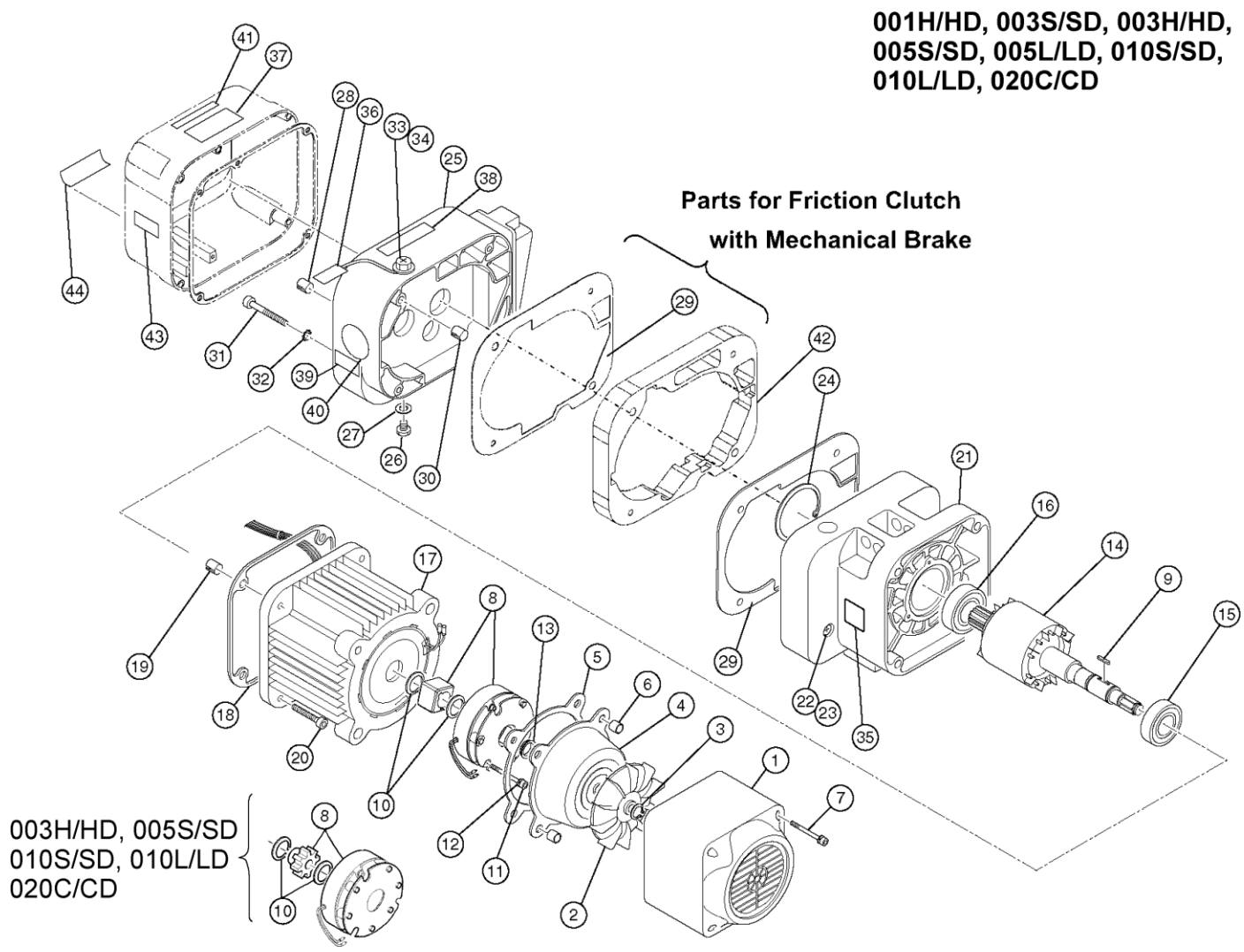

Figure 9-1-1 Housing and Motor Parts

Figure No.	Part Name	Parts Per Hoist		001H	003S	003H	005S	005L	010S	010L	020C
1	Fan Cover		1	ER2BS9107		ER2CS9107		ER2CL9107	ER2DS9107	ER2CS9107	
2	Fan		1	ER2BS9108		ER2CS9108		ER2CL9108	ER2DS9108	ER2CS9108	
3	Snap Ring		1	9047113					9047116	9047113	
4	Brake Cover	F	1	ER2BS9115		ER2CL9115	ER2CS9115	ER2CL9115	ER2DS9115	ER2CS9115	
		M				ER2CL9149		ER2CL9149		ER2DL9149	
5	Packing B		1	ER2BS9119		ER2CS9119		ER2CL9119	ER2DS9119	ER2CS9119	
6	Set Pin S		2	ES120003							
7	Socket Bolt		4	9091234							
8	Electromagnetic Brake Assembly		1	MBABB0ENA		MBABB09NA		MBABB0ENA	MBABB18NA	MBABB09NA	
9	Key B		1	ER2CL9360		ER2CS9360		ER2CL9360	ER2DS9360	ER2CS9360	
10	Snap Ring		2	9047119		9047124		9047116	9047124		
11	Socket Bolt		3	9091254							
12	Spring Lock Washer		3	9012709							
13	V Ring		1	ER2CS9210					ER2DS9210	ER2CS9210	

Figure No.	Part Name	Parts Per Hoist		001H	003S	003H	005S	005L	010S	010L	020C
14	Motor Shaft With Rotor		1	ER2BS5502		ER2CS5502		ER2CL5502	ER2DS5502	ER2DL5502	
15	Ball Bearing		1	9000904		9000905		9000904	9000905		
16	Ball Bearing		1	9001003		9000904			9000922		
17	Motor Frame With Stator		1	ER2BKV03S5A1		ER2BKV05S5A1		ER2BKV05L5A1	ER2BKV10S5A1	ER2BKV10L5A1	
18	Packing M		1	ER2BS9118		ER2CS9118			ER2DS9118		
19	Set Pin S		2	ES120003		ES120010S			ER1DS9138		
20	Socket Bolt		4	9091252		9091275			9091296		
21	Body B Assembly* Lot No. ER2A-...	F	1	ER2BS6101		ER2CS6101			ER2DS6101*		
	Body B Assembly Lot No. ER2B-...	F	1						ER2DS6101R4		
	Body C Assembly* Lot No. ER2A-...	M	1	ER2BS6099		ER2CS6099			ER2DS6099*		
	Body C Assembly Lot No. ER2B-...	M	1						ER2DS6099R4		
16	Ball Bearing		1	9001003		9000904			9000922		
22	Oil Plug		1	E3S111003							
23	Plug Packing		1	E3S112003							
24	Snap Ring		1	9047255		9047262			9047268		
25	Gear Case	F, S	1	ER2BS6103		ER2CS6103			ER2DS6103		
		F, D		ER2BI6103							
		M		ER2BS6102		ER2CS6102			ER2DS6102		
26	Oil Plug		1	E3S111003							
27	Plug Packing		1	E3S112003							
28	Spring Pin		1	9148128		E3S129005S					
29	Packing G	F	1	ER2BS9116		ER2CS9116			ER2DS9116		
		M	2								
30	Set Pin S	F	2	ES120003							
		M	4								
31	Socket Bolt	F	4	9091256							
		M	4	9091262							
32	Toothed Lock Washer		4	9679709							
33	Oil Fill Plug		1	ER1BS9135							
34	Eyebolt Packing		1	ES127005S							
35	Name Plate Load Side E		1	ER1BS9960							
36	Oil Full Tag		1	ER1BS9953							
37	Warning Sticker E (Disconnect Power)		1	ER2CS9936							
38	Name Plate OF (Correct Oil Required)	F	1	ER2CS9845							
	Name Plate OM (Correct Oil Required)	M		ER2CS9846							
39	Name Plate AA (With Mechanical Brake)	M	1	ER1BS9893							
40	Name Plate AD (Speed Letter)		1	ER1BH 9868	ER1BS 9868	ER1BH9868	ER1BS 9868	ER1BL9868	ER1BS9868	ER1BL 9868	ER1DR 9868
41	Warning Sticker HW (Hot Surface)	D	1	ER2CI9806							
42	Spacer M	M	1	ER2BS9296		ER2CS9296			ER2DS9296		
43	Check Voltage Label	S,2V	1	ECP99NVVB							
		S,4V		ECP99NVVA							
		D,2V		ECP99NVWB							
		D,4V		ECP99NVWA							
44	Check Hook Movement Label (bottom front of cover)	S	1	ER1BS9957							

*010L, 010S and 020C Body B and C have been discontinued for lot ER2A. Replace with lot ER2B body B or C and ER2B Top Pins (see pages 63 and 67)

9.1 Housing and Motor Parts

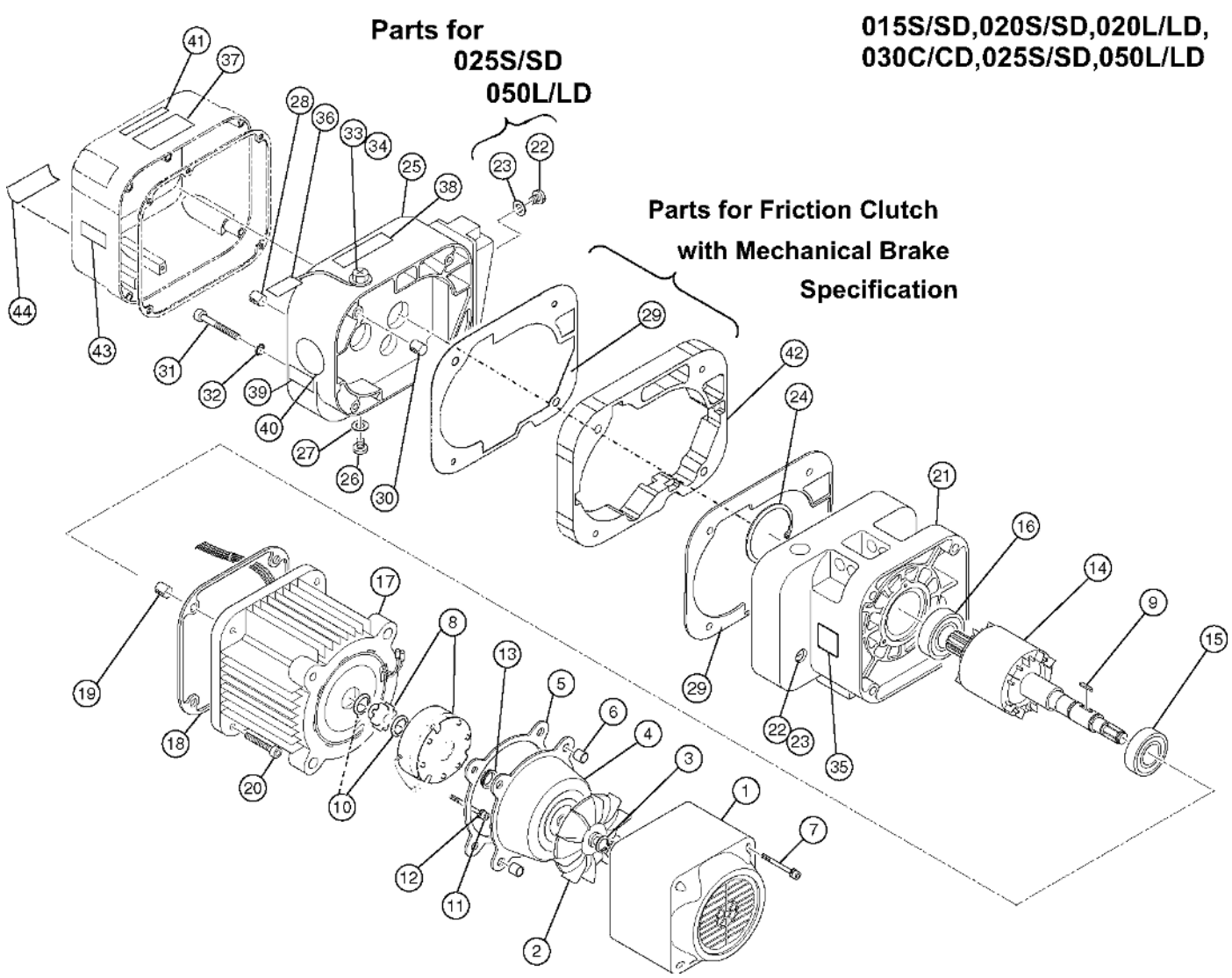

Figure 9-1-2 Housing and Motor Parts

Figure No.	Part Name	Parts Per Hoist		015S	020L	020S	030C	025S	050L
1	Fan Cover		1	ER2DS9107		ER2ES9107			
2	Fan		1	ER2DS9108		ER2ES9108			
3	Snap Ring		1	9047116		9047122			
4	Brake Cover	F	1	ER2DS9115		ER2ES9115			
		M		ER2EL9149					
5	Packing B		1	ER2DS9119		ER2ES9119			
6	Set Pin S		2	ES120003					
7	Socket Bolt		4	9091234		9091255			
8	Electromagnetic Brake Assembly		1	MBABB18NA		MBABB35NA			
9	Key B		1	ER2DS9360		ER2ES9360			

Figure No.	Part Name	Parts Per Hoist		015S	020L	020S	030C	025S	050L
10	Snap Ring		1			9047130			
			2	9047124					
11	Socket Bolt		3	9091254		9091278			
12	Spring Lock Washer		3	9012709		9012711			
13	V Ring		1	ER2DS9210		ER2ES9210			
14	Motor Shaft With Rotor		1	ER2EL5502		ER2ES5502		ER2FS5502	
15	Ball Bearing		1	9000905		9000907			
16	Ball Bearing		1	9000906					
17	Motor Frame w/Stator		1	ER2BKV20L5A1		ER2BKV20S5A1		ER2BKV25S5A1	
18	Packing M		1	ER2ES9118				ER2FS9118	
19	Set Pin S		2	ER2ES9138					
20	Socket Bolt		4	90912116					
21	Body B Assembly	F	1	ER2ES6101				ER2FS6101	
	Body C Assembly	M		ER2EL6099		ER2ES6099		ER2FS6099	
16	Ball Bearing		1	9000906					
22	Oil Plug		1					E3S111003	
23	Plug Packing		1					E3S112003	
24	Snap Ring		1	9047280					
25	Gear Case	F	1	ER2EL6103		ER2ES6103		ER2FS6103	
		M		ER2EL6102		ER2ES6102		ER2FS6102	
26	Oil Plug		1	E3S111003					
27	Plug Packing		1	E3S112003					
28	Spring Pin		1	E3S129005S					
29	Packing G	F	1	ER2ES9116				ER2FS9116	
		M	2						
30	Set Pin S	F	2	ES120010S					
		M	4						
31	Socket Bolt	F	4 (5)	9091280	9091286	9091280	9091286		
		M	4 (5)	90912147			90912155		
32	Toothed Lock Washer		4 (5)	9679711					
33	Oil Fill Plug		1	ER1BS9135					
34	Eyebolt Packing		1	ES127005S					
35	Name Plate Load Side E		1	ER1BS9960					
36	Oil Full Tag		1	ER1BS9953					
37	Warning Sticker E (Disconnect Power)		1	ER2CS9936					
38	Name Plate OF (Correct Oil Required)	F	1	ER2CS9845					
	Name Plate OM (Correct Oil Required)	M		ER2CS9846					
39	Name Plate AA (With Mechanical Brake)	M	1	ER1BS9893					
40	Name Plate AD (Speed Letter)		1	ER1BS9868	ER1BL9868	ER1BS9868	ER1DR9868	ER1BS9868	ER1BL9868
41	Warning Sticker HW (Hot Surface)	D	1	ER2CI9806					
42	Spacer M	M	1	ER2EL9296		ER2ES9296		ER2FS9296	
43	Check Voltage Label	S,2V	1	ECP99NVVB					
		S,4V		ECP99NVVA					
		D,2V		ECP99NVWB					
		D,4V		ECP99NVWA					
44	Check Hook Movement Label (bottom front of cover)	S	1	ER1BS9557					

*Quantities in "( )" are for 025 and 050 hoists.

9.2 Gearing Parts

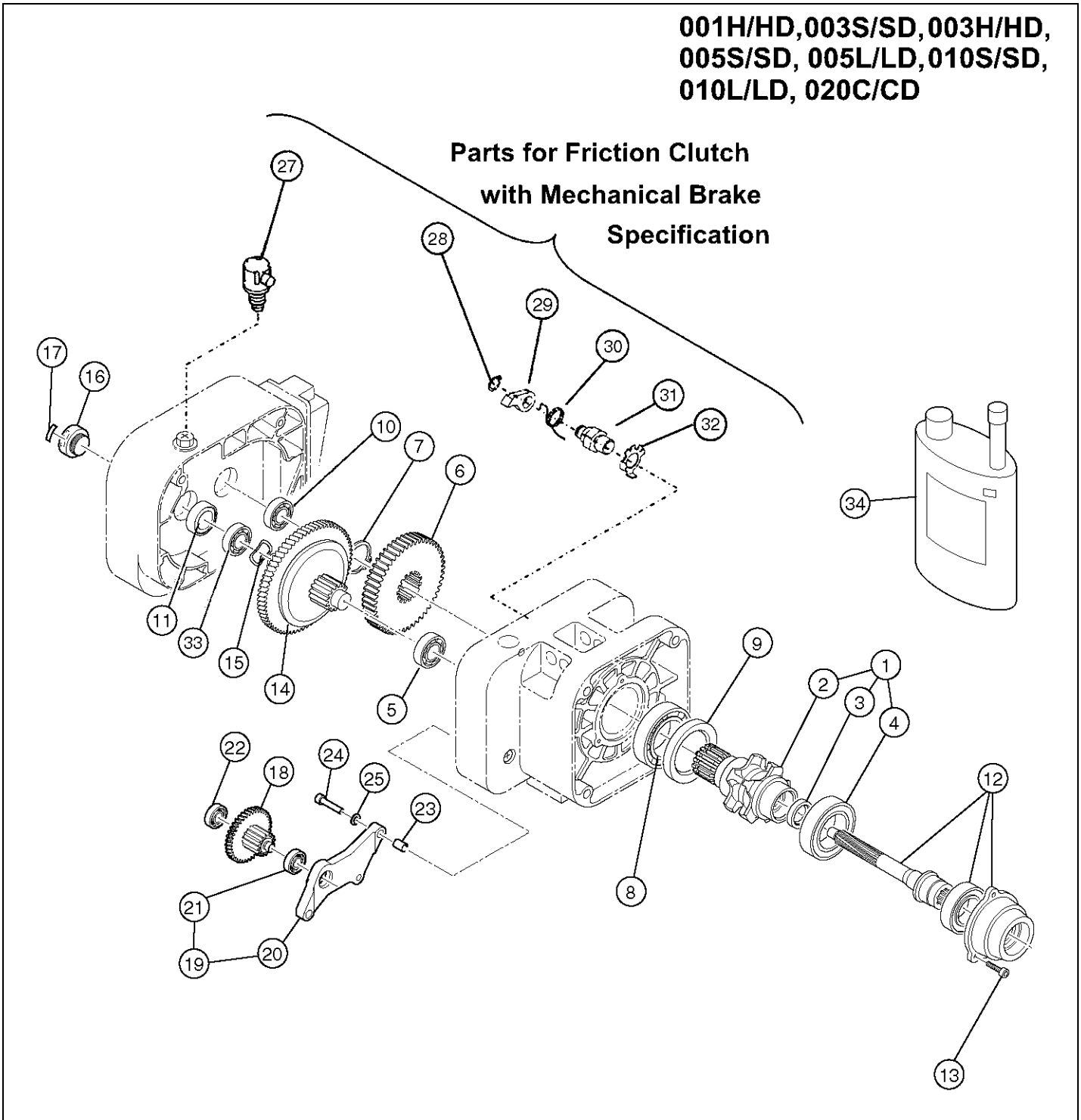

Figure 9-2-1 Gearing Parts

Figure No.	Part Name	Parts Per Hoist		001H	003S	003H	005S	005L	010S	010L/020C
1	Load Sheave Assembly		1	ER2BS6241		ER2CS6241			ER2DS6241	
2	Load Sheave		1	ER2BS9241		ER2CS9241			ER2DS9241	
3	Oil Seal		1	ER2BS9221		ER2CS9221			ES221010S	
4	Ball Bearing		1	9000506		9000508			9000509	
5	Ball Bearing		1	9000202		9000104		9000302	9000104	9000304
6	Load Gear	F	1	ER2BH9240	ER2BS9240	ER2CH9240	ER2CS9240	ER2CL9240	ER2DS9240	
		M						ER2CS9240		
7	Snap Ring		1	9047130		9047135				
8	Ball Bearing		1	9000106		9000107			9000108	
9	Oil Seal		1	ER2BS9244		ES232005S			ES232010S	
10	Ball Bearing		1	9000200		9000201			9000301	
11	Oil Seal	F	1	E6F235003S						
12	Pinion Assembly	F	1	ER2BS5220		ER2CS5220			ER2DS5220	
		M	1	ER2BS5304		ER2CS5304			ER2DS5304	
13	Socket Bolt		3	90912149						
14	Friction Clutch Complete Assembly	F	1	ER2BH1223	ER2BS1223	ER2CH1223	ER2CS1223	ER2CL1223	ER2DS1223	ER2DL1223
	Friction Clutch With Mechanical Brake Complete Assembly	M	1	ER2BH1274	ER2BS1274	ER2CH1274	ER2CS1274	ER2CL1274	ER2DS1274	ER2DL1274
15	Wave Washer	F	1	E1DBX20S9311						
16	Nut Cover	F	1	ER1CS9235						
17	Name Plate FP (Adjustment Of Friction Clutch Prohibited)	F	1	ER1BS9892						
18	Gear B Assembly	F	1							ER2DL5262
		M						ER2CL5306		ER2DL5306
19	Gear Holder Plate Assembly	F	1							ER2DL6261
		M						ER1CL6261		
20	Gear Holder Plate	F	1							ER2DL9261
		M						ER1CL9261		
21	Ball Bearing	F	1							9000101
		M						9000100		
22	Ball Bearing	F	1							9000100
		M						9000100		
23	Set Pin S	F	2							ES120003
		M						ES120003		
24	Socket Bolt	F	3							9091252
		M						9091252		
25	Spring Lock Washer	F	3							9012709
		M						9012709		
27	Vent Cap	M	1	ER1BS1175						
28	Snap Ring	M	1	9047111						
29	Pawl	M	1	L4155015						
30	Pawl Spring	M	1	ER1BS9290						
31	Pawl Shaft	M	1	ER2CS9289						
32	Pawl Shaft Washer	M	1	ER2CS9294						
33	Ball Bearing	M	1	9000300		9000202				
34*	NER2 Gear Oil 1qt	F	1	ER1BS1855*						
	NER2 Gear Oil 2.5 gal	F	1	ER1CS1855*						
	ER2 Gear Oil 1qt	M	1	7019801*						
	ER2 Gear Oil 2.5 gal	M	1	7019802*						

*Refer to Section 2.1.1 to for how to identify NER2 verse ER2. Refer to Section 6.3 for the amount of gear oil required and for the method to check the oil level.

9.2 Gearing Parts

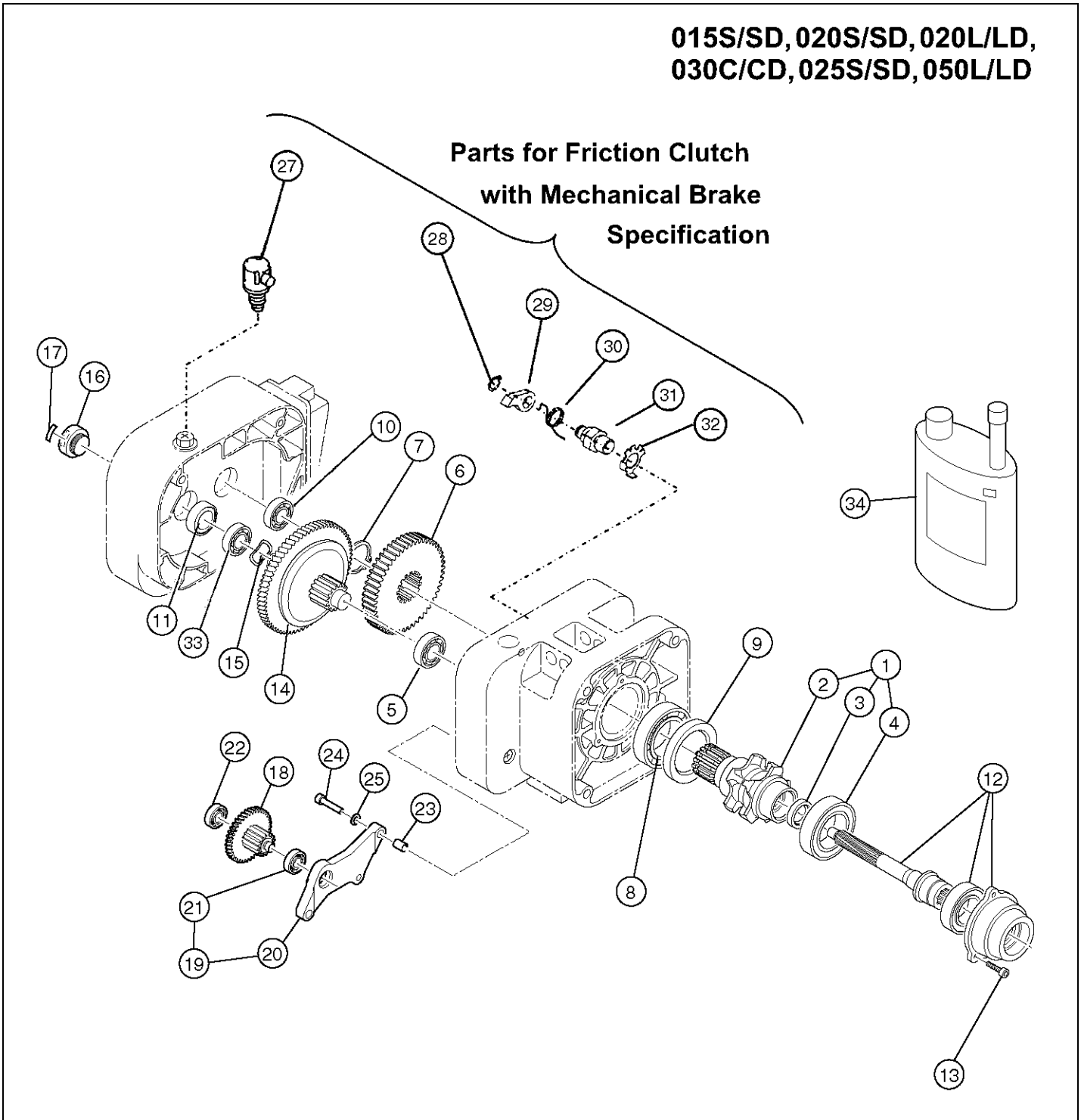

Figure 9-2-2 Gearing Parts

Figure No.	Part Name	Parts Per Hoist		015S	020L	020S	030C	025S	050L
1	Load Sheave Assembly		1	ER2ES6241				ER2FS6241	
2	Load Sheave		1	ER2ES9241				ER2FS9241	
3	Oil Seal		1	ER2ES9221					
4	Ball Bearing		1	9000609				9000610	
5	Ball Bearing		1	9000405					
6	Load Gear		1	ER2EM9240	ER2EL9240	ER2ES9240	ER2ER9240	ER2FS9240	
7	Snap Ring		1	9047150					
8	Ball Bearing		1	9000110					
9	Oil Seal		1	ER2ES9244					
10	Ball Bearing		1	9000303					
11	Oil Seal 22	F	1	ER1DS9233					
12	Pinion Assembly	F	1	ER2EL5220		ER2ES5220		ER2FS5220	
		M	1	ER2EL5304		ER2ES5304		ER2FS5304	
13	Socket Bolt		3	90912149					
14	Friction Clutch Complete Assembly	F	1	ER2EM1223	ER2EL1223	ER2ES1223	ER2ER1223	ER2FS1223	ER2FR1223
	Friction Clutch With Mechanical Brake Complete Assembly	M	1	ER2EM1274	ER2EL1274	ER2ES1274	ER2ER1274	ER2FS1274	ER2FR1274
15	Wave Washer	F	1	ER1DS9234		ER2ES9234			
16	Nut Cover	F	1	ER1DS9235		ER2ES9235			
17	Name Plate FP (Adjustment Of Friction Clutch Prohibited)	F	1	ER1BS9892					
18	Gear B Assembly	F	1	ER2EM5262	ER2EL5262			ER2FS5262	
		M		ER2EM5306	ER2EL5306			ER2FS5306	
19	Gear Holder Plate Assembly		1	ER2EL6261				ER2FS6261	
20	Gear Holder Plate		1	ER2EL9261				ER2FS9261	
21	Ball Bearing		1	9000202				9000203	
22	Ball Bearing		1	9000201				9000202	
23	Set Pin S		2	ES120010S				ES120010S	
24	Socket Bolt		3	9091275				9091275	
25	Spring Lock Washer		3	9012711				9012711	
27	Vent Cap	M	1	ER1BS1175					
28	Snap Ring	M	1	9047116					
29	Pawl	M	1	ER2FS9288					
30	Pawl Spring	M	1	ER2FS9290					
31	Pawl Shaft	M	1	ER2FS9289					
32	Pawl Shaft Washer	M	1	ER2CS9294					
33	Ball Bearing	M	1	9000303		9000304			
34	NER2 Gear Oil 1qt	F	1	ER1BS1855*					
	NER2 Gear Oil 2.5 gal	F	1	ER1CS1855*					
	ER2 Gear Oil 1qt	M	1	7019801*					
	ER2 Gear Oil 2.5 gal	M	1	7019802*					

*Refer to Section 2.1.1 to for how to identify NER2 verse ER2. Refer to Section 6.3 for the amount of gear oil required and for the method to check the oil level.

9.3 Hook and Chain Parts

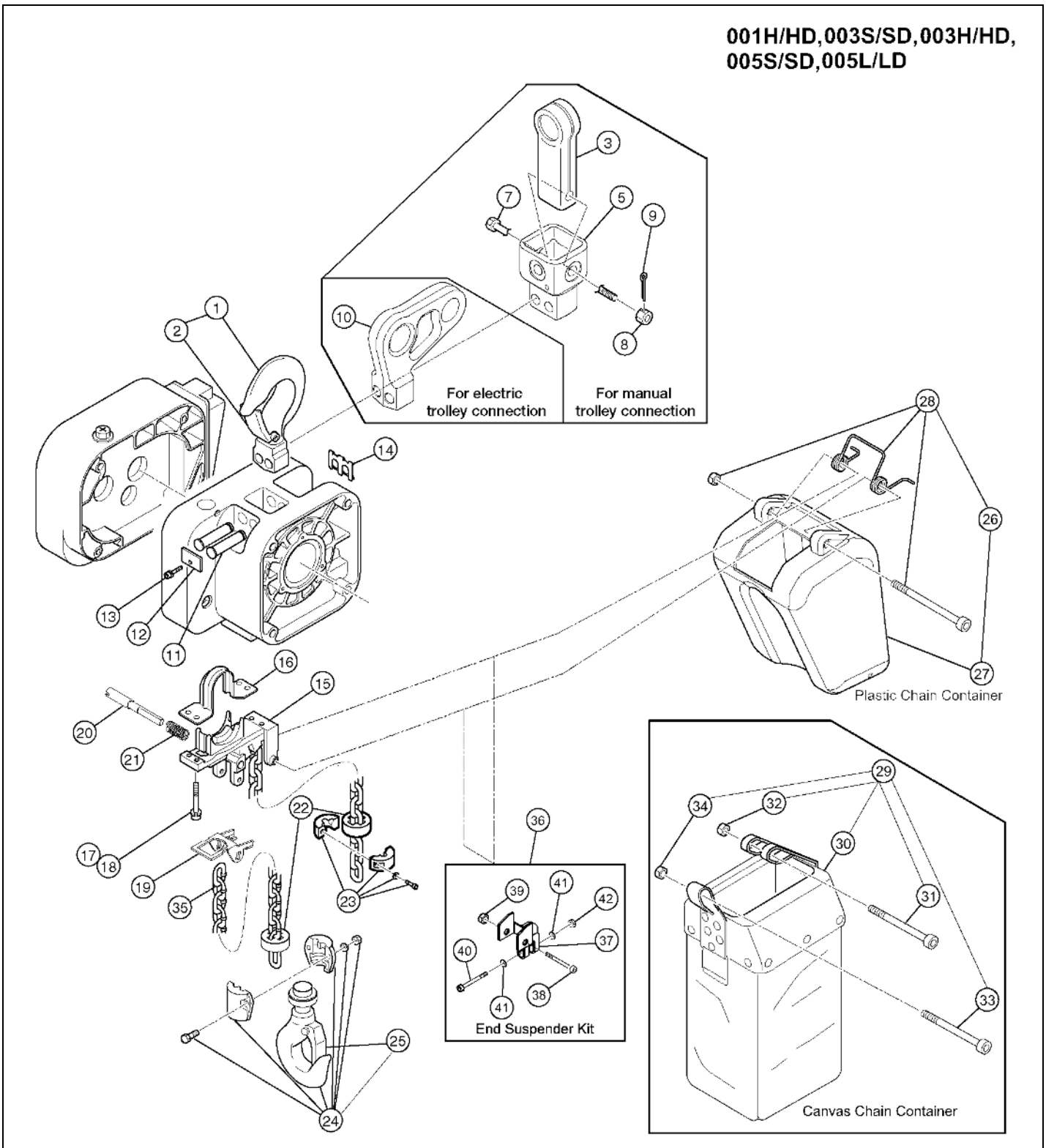

Figure 9-3-1 Hook and Chain Parts

Figure No.	Part Name	Parts Per Hoist		001H	003S	003H	005S	005L
1	Top Hook Assembly		1	ER2CS1001				
2	Hook Latch		1	ER2CS1002				
3	Suspender E (For Manual Trolley)		1	T7GB004005				
5	Connection Yoke PG* (For Manual Trolley)		1	ER2CS5027*				
7	Yoke Bolt		1	ER1CS9032				
8	Slotted Nut		1	L3183008				
9	Split Pin		1	9009414-5				
10	Suspender T (For Motorized Trolley)		1	ER2DS9031				
11	Top Pin		2	ER2CS9121				
12	Plate A		1	ER2CS9123				
13	Socket Bolt With Spring Washer		1	J1BG10601212				
14	Shaft Clip		1	ER2CS9186				
15	Chain Guide A		1	ER2BS9331		ER2CS9331		
16	Chain Guide B		1	ER2BS9332		ER2CS9332		
17	Socket Bolt		4	9091251				
18	Spring Lock Washer		4	9012709				
19	Limit Lever		1	ER2BS9337		ER2CS9337		
20	Limit Lever Pin	F	1	ER2BS9338		ER2CS9338		
		M		ER2BS9356		ER2CS9356		
21	Limit Lever Spring		1	ER2CS9357				
22	Cushion Rubber		2	ER2BS9053		ER1CS9053		
23	Stopper Assembly		1	ES1045003		ER2CS1041		
24	Bottom Hook Complete Assembly		1	ER2BH1011	ER2BS1011	ER2CH1011	ER2CS1011	
25	Hook Latch		1	ER2CS1002				
26	Plastic Chain Container Assembly (Max. Lifting Height 20ft)		1	PBK2-B		PBK2-C		
27	Plastic Chain Container		1	ER2BS1401		ER2CS1401		
28	Plastic Container Spring Assembly		1	ER2BS1416		ER2CS1416		
29	Canvas Chain Container Assembly (Max. Lift Height 50ft)		1	BK2C1		BK2C2		
30	Canvas Chain Container		1	ER2CS5403		ER2CS5405		
31	Socket Bolt		1	9091283				
32	Lever Nut		1	ES857005S				
33	Socket Bolt		1	ER419001				
34	Lever Nut		1	ES855003				
35	NP Load Chain		1	LCER2003NP		LCER2005NP		
36	End Suspender Kit		1	ENDS2B		ENDS2C		
37	End Suspender		1	ER2BS9408		ER2CS9408		
38	Socket Bolt		1	9091281		9091283		
39	Lever Nut		1	ES857005S				
40	Socket Bolt		1	90912150		90912151		
41	Flat Washer		2	9012510		9012511		
42	Lever Nut		1	E2D853125		ES855003		

*Connection Yoke PG replaces Connection Yoke P (ER2CS9027) and Connection Yoke G (ER2CS9029)

9.3 Hook and Chain Parts

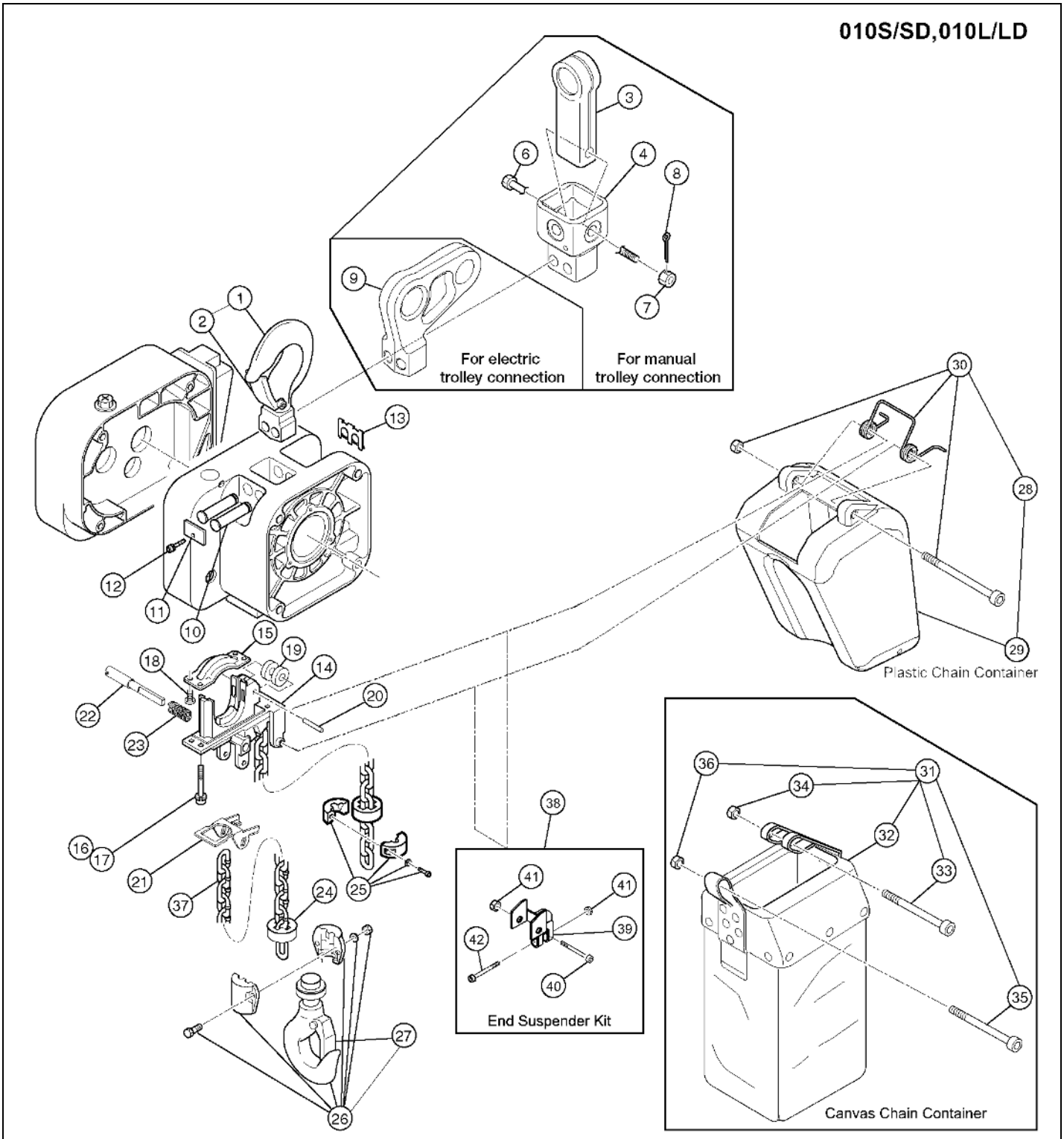

Figure 9-3-2 Hook and Chain Parts

Figure No.	Part Name	Parts Per Hoist		010S	010L
1	Top Hook Assembly		1	ER2DS1001	
2	Hook Latch		1	ER2DS1002	
3	Suspender E (For Manual Trolley)		1	T7GB004010	
4	Connection Yoke PG* (For Manual Trolley)		1	ER2CS5027*	
6	Yoke Bolt		1	ER1CS9032	
7	Slotted Nut		1	L3183008	
8	Split Pin		1	9009414-5	
9	Suspender T (For Motorized Trolley)		1	ER2DS9031	
10	Top Pin, Lot No. ER2A-..., 2.7in (69mm) Long		2	ER2CS9121	
	Top Pin, Lot No. ER2B-..., 3.7in (95mm) Long		2	ER2DS9121	
11	Plate A		1	ER2CS9123	
12	Socket Bolt With Spring Washer		1	J1BG10601212	
13	Shaft Clip		1	ER2CS9186	
14	Chain Guide A		1	ER2DS9331	
15	Chain Guide B		1	ER2DS9332	
16	Socket Bolt		4	9091274	
17	Spring Lock Washer		4	9012711	
18	Machine Screw With Spring Washer		4	M6F554010	
19	Guide Roller		1	ER2DS9333	
20	Roller Pin		1	ER1CS9334	
21	Limit Lever		1	ER2DS9337	
22	Limit Lever Pin	F	1	ER2DS9338	
		M		ER2DS9356	
23	Limit Lever Spring		1	ER2CS9357	
24	Cushion Rubber		2	ER1DS9053	
25	Stopper Assembly		1	ER1DS1041	
26	Bottom Hook Complete Assembly		1	ER2DS1011	
27	Hook Latch		1	ER2DS1002	
28	Plastic Chain Container Assembly (Max. Lifting Height 20ft)		1	PBK2-D	
29	Plastic Chain Container		1	ER2DS1401	
30	Plastic Container Spring Assembly		1	ER2DS1416	
31	Canvas Chain Container Assembly (Max. Lifting Height 50ft)		1	BK2D2	
32	Canvas Chain Container		1	ER2DS5405	
33	Socket Bolt		1	9091286	
34	Lever Nut		1	ES857005S	
35	Socket Bolt		1	ER419001	
36	Lever Nut		1	ES855003	
37	NP Load Chain		1	LCER2010NP	
38	End Suspender Kit		1	ENDS2D	
39	End Suspender		1	ER2CS9408	
40	Socket Bolt		1	90912153	
41	Lever Nut		2	ES857005S	
42	Socket Bolt		1	90912152	

*Connection Yoke PG replaces Connection Yoke P (ER2CS9027) and Connection Yoke G (ER2CS9029)

9.3 Hook and Chain Parts

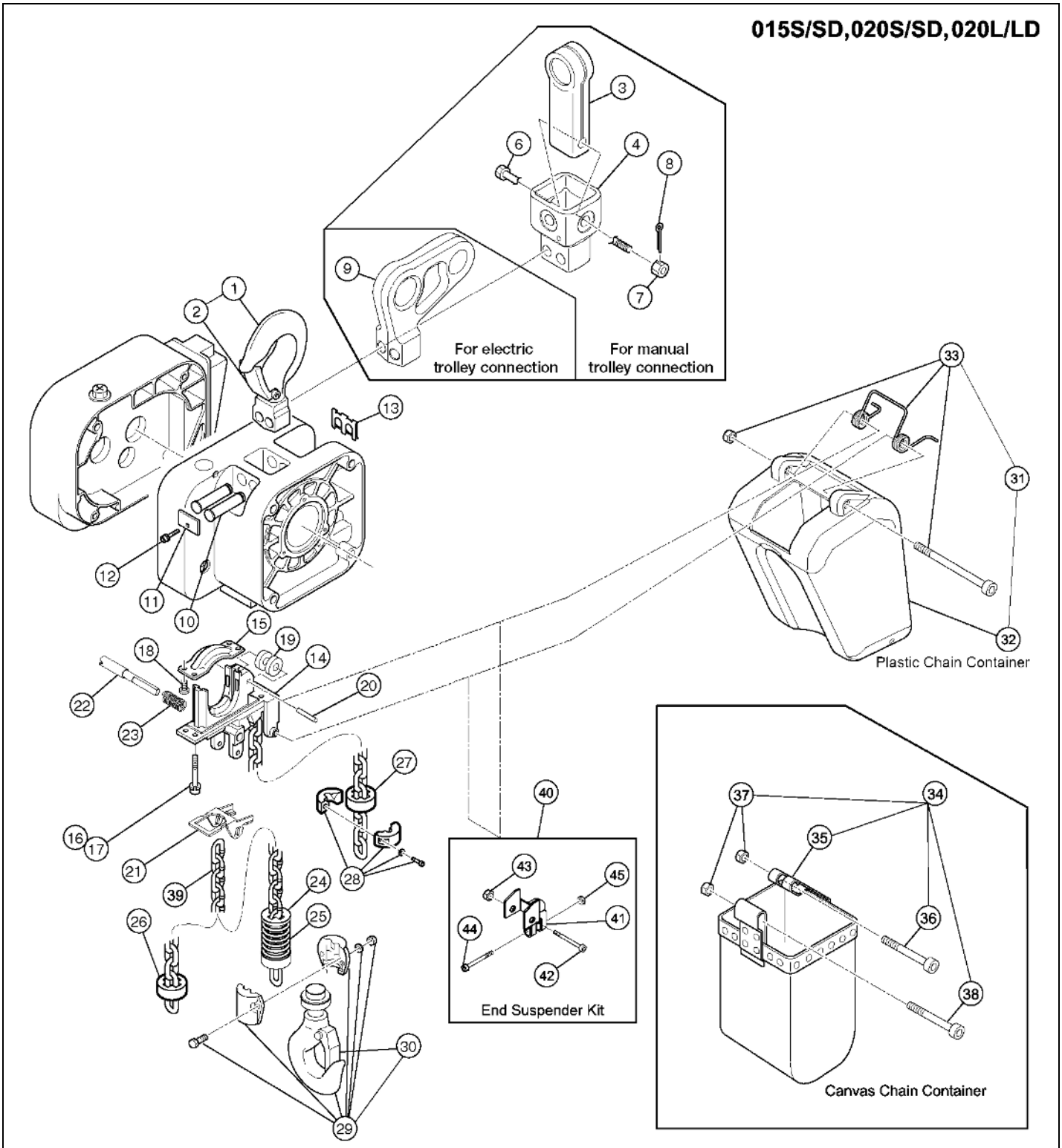

Figure 9-3-3 Hook and Chain Parts

Figure No.	Part Name	Parts Per Hoist		015S	020S	020L
1	Top Hook Assembly		1	ER2ES1001		
2	Hook Latch		1	ER2ES1002		
3	Suspender E (For Manual Trolley)		1	T7GB004020		
4	Connection Yoke PG* (For Manual Trolley)		1	ER2ES5027*		
6	Yoke Bolt		1	ER1ES9032		
7	Slotted Nut		1	ES088020L		
8	Split Pin		1	9009436		
9	Suspender T		1	ER2ES9031		
10	Top Pin		2	ER2ES9121		
11	Plate A		1	ER2ES9123		
12	Socket Bolt With Spring Washer		1	J1BG10601212		
13	Shaft Clip		1	ER2ES9186		
14	Chain Guide A		1	ER2ES9331		
15	Chain Guide B		1	ER2ES9332		
16	Socket Bolt		4	9091274		
17	Spring Lock Washer		4	9012711		
18	Machine Screw With Spring Washer		4	E6F151003		
19	Guide Roller		1	ER1DL9333		
20	Roller Pin		1	ER1DL9334		
21	Limit Lever		1	ER2ES9337		
22	Limit Lever Pin	F	1	ER2EL9338	ER2ES9338	ER2EL9338
		M		ER2EL9356	ER2ES9356	ER2EL9356
23	Limit Lever Spring		1	ER2CS9357		
24	Limiting Plate		1		ER1ES9054	
25	Chain Spring		1		E7SS020S9047	ER1DL9051
26	Cushion Rubber		1	ER1ES9053		
27	Cushion Rubber		1	ER1ES9053		
28	Stopper Assembly		1	ER1ES1041		
29	Bottom Hook Complete Assembly		1	ER2EM1011	ER2ES1011	
30	Hook Latch		1	ER2EM1002	ER2ES1002	
31	Plastic Chain Container Assembly (Max. Lifting Height 13ft)		1	PBK2-E		
32	Plastic Chain Container		1	ER2ES1401		
33	Plastic Container Spring Assembly		1	ER2ES1416		
34	Canvas Chain Container Assembly (Max. Lifting Height 60ft)		1	BK2E2		
35	Canvas Chain Container		1	ER2ES5405		
36	Socket Bolt		1	90912107		
37	Lever Nut		2	ES066075		
38	Socket Bolt		1	90912104		
39	NP Load Chain		1	LCER2020NP		
40	End Suspender Kit		1	ENDS2E		
41	End Suspender		1	ER2ES9408		
42	Socket Bolt		1	90912107		
43	Lever Nut		1	ES066075		
44	Socket Bolt		1	90912152		
45	Lever Nut		1	ES857005S		

*Connection Yoke PG replaces Connection Yoke P (ER2ES9027) and Connection Yoke G (ER2ES9029)

9.3 Hook and Chain Parts

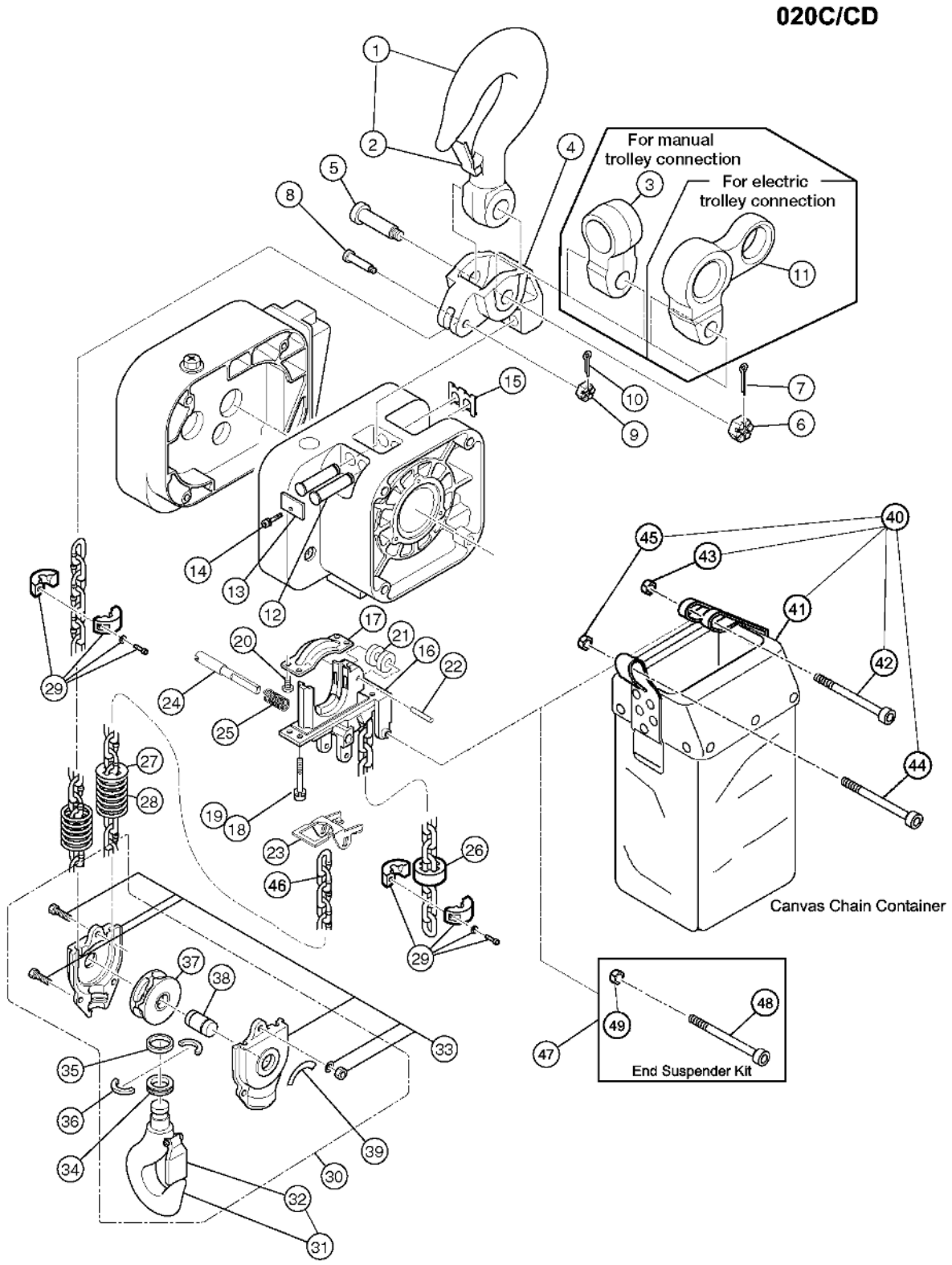

Figure 9-3-4 Hook and Chain Parts

Figure No.	Part Name	Parts Per Hoist		020C
1	Top Hook Assembly		1	ER2DR1001
2	Hook Latch		1	ER2DS1002
3	Suspender E (For Manual Trolley)		1	T7GB004020
4	Connection Yoke D		1	ER2DR9030
5	Yoke Bolt		1	ER1ES9032
6	Slotted Nut		1	ES088020L
7	Split Pin		1	9009436
8	Chain Pin		1	M2041010
9	Slotted Nut		1	M2049010
10	Split Pin		1	9009412
11	Suspender T (For Motorized Trolley)		1	ER2DR9031
12	Top Pin, Lot No. ER2A-..., 2.7in (69mm) Long		2	ER2CS9121
	Top Pin, Lot No. ER2B-..., 3.7in (95mm) Long		2	ER2DS9121
13	Plate A		1	ER2CS9123
14	Socket Bolt With Spring Washer		1	J1BG10601212
15	Shaft Clip		1	ER2CS9186
16	Chain Guide A		1	ER2DS9331
17	Chain Guide B		1	ER2DS9332
18	Socket Bolt		4	9091274
19	Spring Lock Washer		4	9012711
20	Machine Screw With Spring Washer		4	E6F151003
21	Guide Roller		1	ER1DS9333
22	Roller Pin		1	ER1DL9334
23	Limit Lever		1	ER2DS9337
24	Limit Lever Pin	F	1	ER2DS9338
		M		ER2DS9356
25	Limit Lever Spring		1	ER2CS9357
26	Cushion Rubber		2	ER1DS9053
27	Limiting Plate		1	ER2DR9054
28	Chain Spring		2	ER1DS9051
29	Stopper Assembly		2	ER1DS1041
30	Bottom Hook Complete Assembly		1	ER2DR1011
31	Bottom Hook Assembly		1	ER2DR2011
32	Hook Latch		1	ER2DS1002
33	Bottom Yoke Assembly		1	ER2DR2015
34	Thrust Bearing		1	ES022015
35	Thrust Collar A		1	ES026015
36	Hook Stopper A		2	ES027015
37	Idle Sheave Assembly		1	ER2DR6021
38	Bottom Shaft Assembly		1	ER2DR6023
39	Name Plate C		1	80173
40	Canvas Chain Container Assembly (Max. Lifting Height 26ft)		1	BK2D2
41	Canvas Chain Container		1	ER2DS5405
42	Socket Bolt		1	9091286
43	Lever Nut		1	ES857005S
44	Socket Bolt		1	ER419001
45	Lever Nut		1	ES855003
46	NP Load Chain		1	LCER2010NP
47	End Suspender Kit		1	ENDS2D2
48	Socket Bolt		1	90912153
49	Lever Nut		1	ES857005S

9.3 Hook and Chain Parts

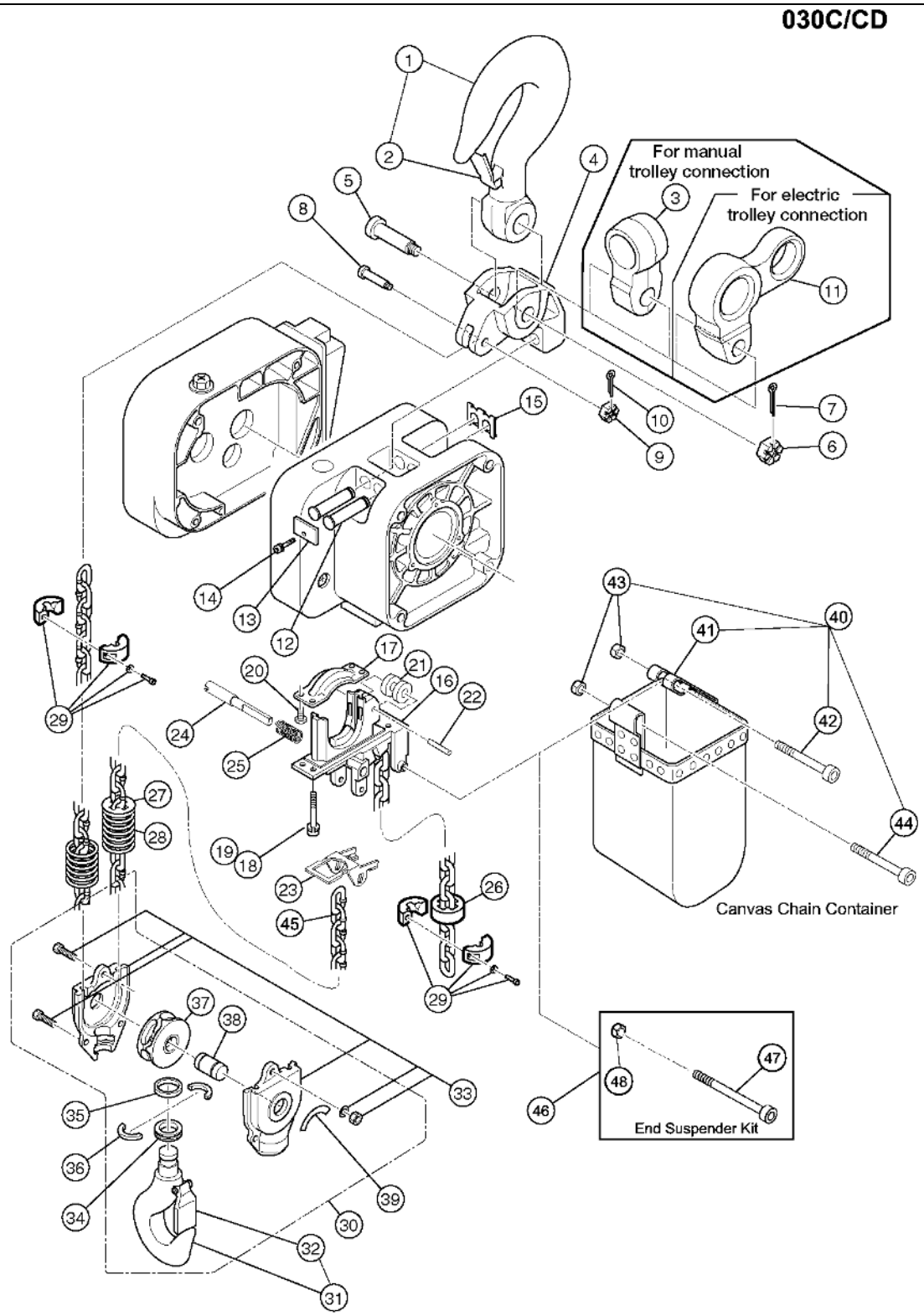

Figure 9-3-5 Hook and Chain Parts

Figure No.	Part Name	Parts Per Hoist		030C
1	Top Hook Assembly		1	ER2ER1001
2	Hook Latch		1	ER2ER1002
3	Suspender E (For Manual Trolley)		1	T7GB004030
4	Connection Yoke D		1	ER2ER9030
5	Yoke Bolt		1	ER1ES9032
6	Slotted Nut		1	L3183008
7	Split Pin		1	9009436
8	Chain Pin		1	ES041030
9	Slotted Nut		1	M2049020
10	Split Pin		1	9009416
11	Suspender T (For Motorized Trolley)		1	ER2ER9031
12	Top Pin		2	ER2ES9121
13	Plate A		1	ER2ES9123
14	Socket Bolt With Spring Washer		1	J1BG10601212
15	Shaft Clip		1	ER2ES9186
16	Chain Guide A		1	ER2ES9331
17	Chain Guide B		1	ER2ES9332
18	Socket Bolt		4	9091274
19	Spring Lock Washer		4	9012711
20	Machine Screw With Spring Washer		4	E6F151003
21	Guide Roller		1	ER1DL9333
22	Roller Pin		1	ER1DL9334
23	Limit Lever		1	ER2ES9337
24	Limit Lever Pin	F	1	ER2ES9338
		M		ER2ES9356
25	Limit Lever Spring		1	ER2CS9357
26	Cushion Rubber		1	ER1EM9053
27	Limiting Plate		1	ER1ES9054
28	Chain Spring		2	ES047015
29	Stopper Assembly		2	ER1ES1041
30	Bottom Hook Complete Assembly		1	ER2ER1011
31	Bottom Hook Assembly		1	ER2ER2011
32	Hook Latch		1	ER2ER1002
33	Bottom Yoke Assembly		1	ER2ER2015
34	Thrust Bearing		1	ES022025
35	Thrust Collar A		1	ES026025
36	Hook Stopper A		2	ES027025
37	Idle Sheave Assembly		1	ER2ER6021
38	Bottom Shaft Assembly		1	ER2ER6023
39	Name Plate C		1	80173
40	Canvas Chain Container Assembly (Max. Lifting Height 20ft)		1	BK2E1
41	Canvas Chain Container		1	ER2ES5403
42	Socket Bolt		1	90912107
43	Lever Nut		2	ES066075
44	Socket Bolt		1	90912104
45	NP Load Chain		1	LCER2020NP
46	End Suspender Kit		1	ENDS2E2
47	Socket Bolt		1	90912107
48	Lever Nut		1	ES066075

9.3 Hook and Chain Parts

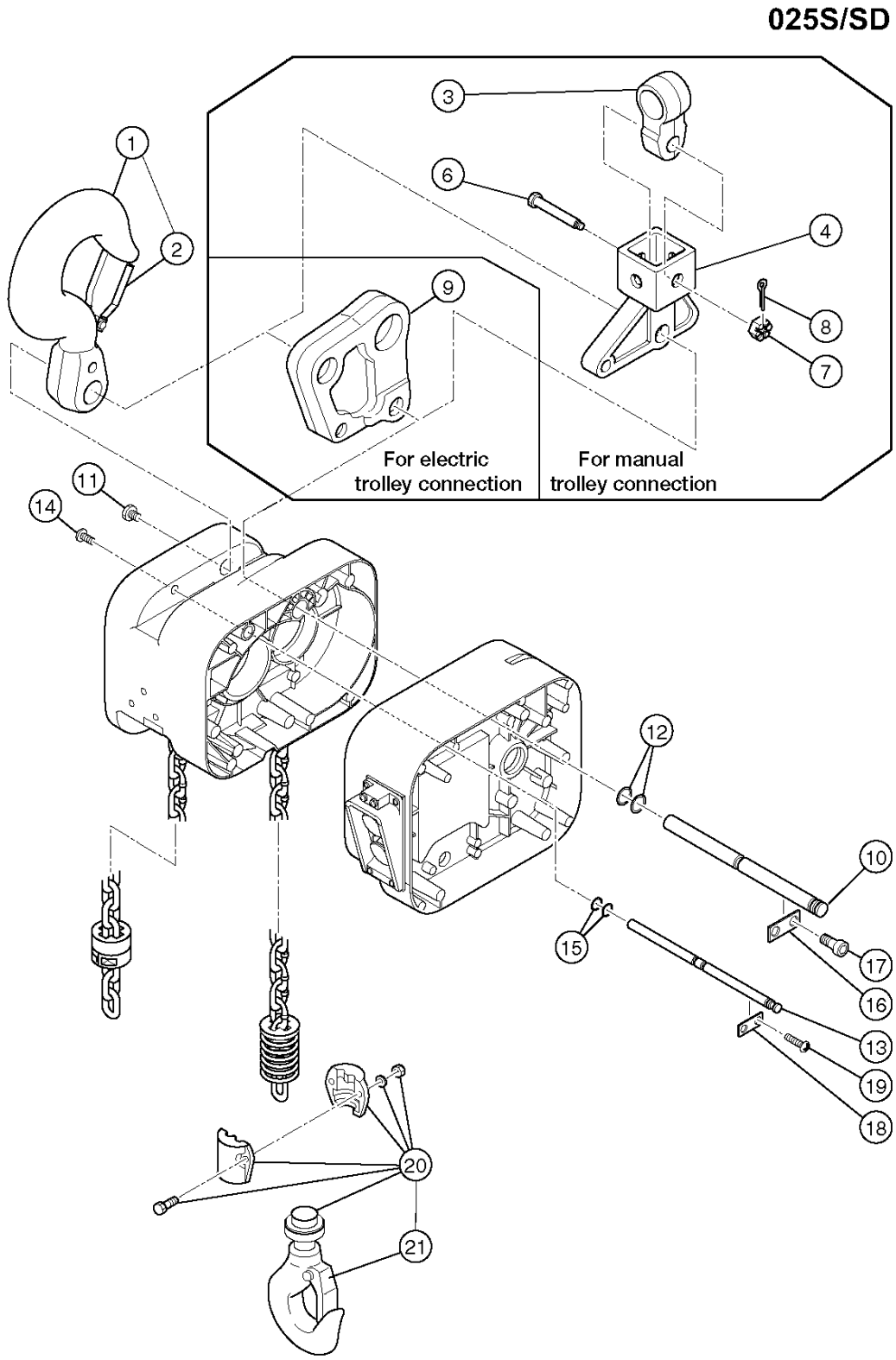

Figure 9-3-6 Hook and Chain Parts

Figure No.	Part Name	Parts Per Hoist	025S
1	Top Hook Complete Assembly	1	ER2FS1001
2	Hook Latch	1	ER2FS1002
3	Suspender E (For Manual Trolley)	1	T7GB004030
4	Connection Yoke PG* (For Manual Trolley)	1	ER2FS5027*
6	Yoke Bolt	1	ER2FS9032
7	Slotted Nut	1	ES088020L
8	Split Pin	1	9009436
9	Suspender T (For Motorized Trolley)	1	ER2FS9031
10	Connection Shaft Assembly	1	ER2FS6121
11	Shaft Plug	1	ER2FS9128
12	O Ring	2	9013317
13	Fixing Shaft Assembly	1	ER2FS6122
14	Fixing Shaft Plug	1	ER2FS9131
15	O Ring	2	9013307
16	Connection Shaft Plate A	1	ER1ES9123
17	Socket Bolt With Spring Washer	2	J1BG10601616
18	Fixing Shaft Plate A	1	ER1BS9123
19	Machine Screw With Spring Washer	2	M6F554010
20	Bottom Hook Complete Assembly	1	ER2FS1011
21	Hook Latch	1	ER2ES1002

*Connection Yoke PG replaces Connection Yoke P (ER2FS9027) and Connection Yoke G (ER2FS9029)

9.3 Hook and Chain Parts

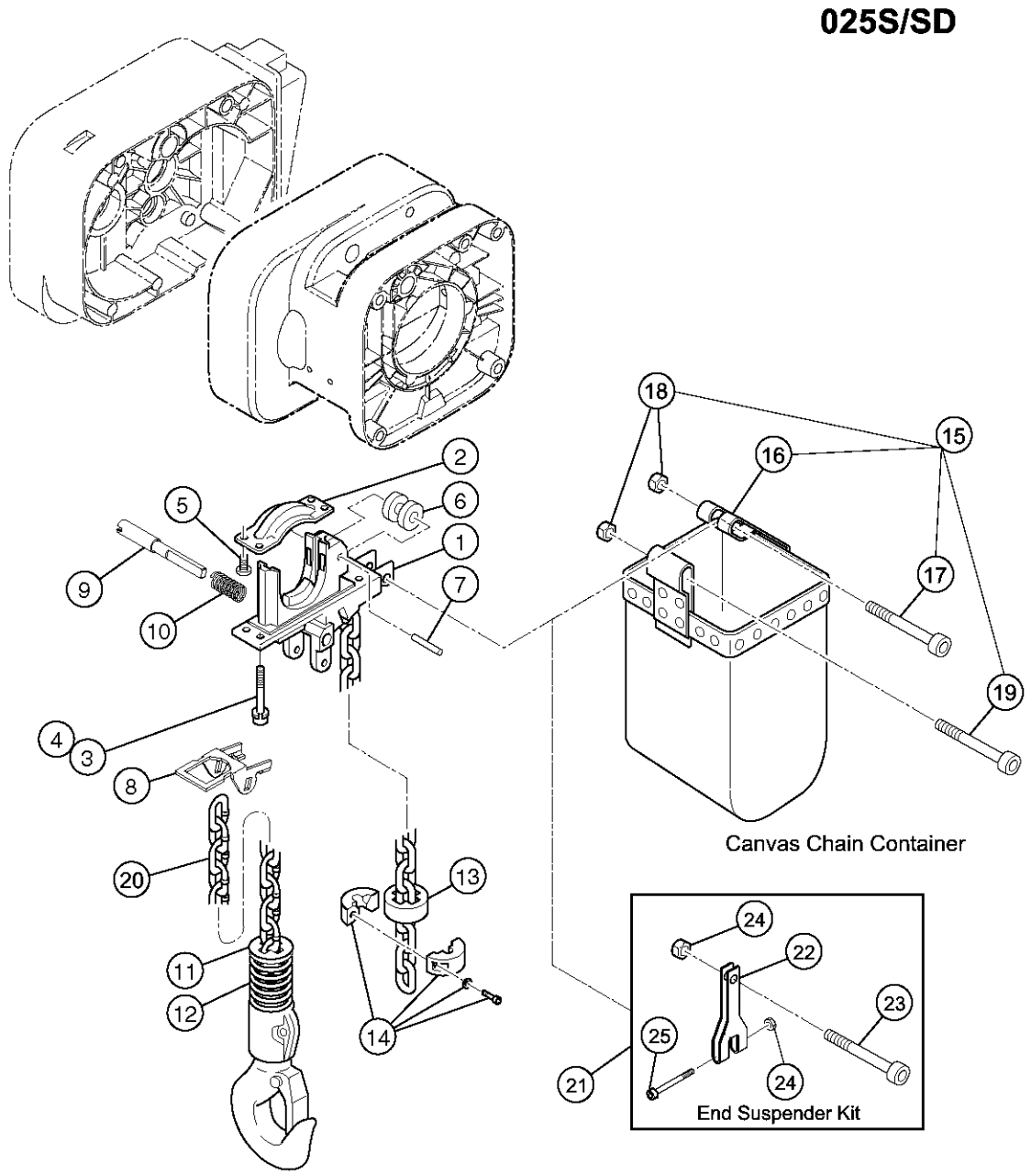

Figure 9-3-7 Hook and Chain Parts

Figure No.	Part Name	Parts Per Hoist		025S
1	Chain Guide A		1	ER2FS9331
2	Chain Guide B		1	ER2FS9332
3	Socket Bolt		4	9091274
4	Spring Lock Washer		4	9012711
5	Machine Screw With Spring Washer		4	E6F151003
6	Guide Roller		1	ER1EM9333
7	Roller Pin		1	ER2FS9334
8	Limit Lever		1	ER2FS9337
9	Limit Lever Pin	F	1	ER2FS9338
		M		ER2FS9356
10	Limit Lever Spring		1	ER2CS9357
11	Limiting Plate		1	ER1FH9054
12	Chain Spring		1	ER1EM9051
13	Cushion Rubber		1	ER1EM9053
14	Stopper Assembly		1	ER1ES1041
15	Canvas Chain Container Assembly (Max. Lifting Height 40ft)		1	BK2F2
16	Canvas Chain Container		1	ER2FS5405
17	Socket Bolt		1	90912140
18	Lever Nut		2	ES066075
19	Socket Bolt		1	90912104
20	NP Load Chain		1	LCER2025NP
21	End Suspender Kit		1	ENDS2F
22	End Suspender		1	ER1ES9408
23	Socket Bolt		1	90912101
24	Lever Nut		1	ES066075
25	Socket Bolt		1	90912140
26	Lever Nut		1	ES066075

9.3 Hook and Chain Parts

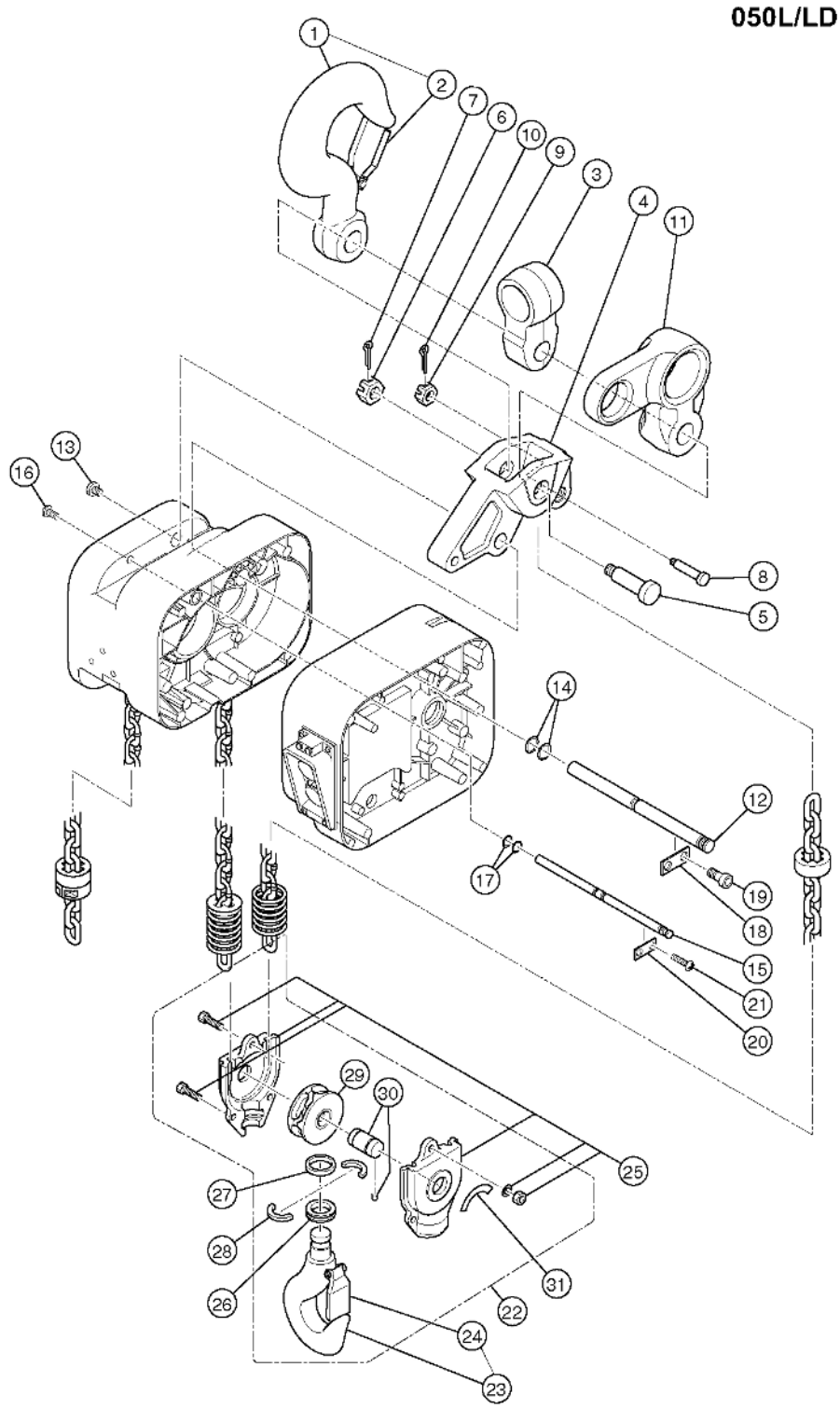

Figure 9-3-8 Hook and Chain Parts

Figure No.	Part Name	Parts Per Hoist	050L
1	Top Hook Assembly	1	ER2FR1001
2	Hook Latch	1	ER2FR9002
3	Suspender G (For Manual Trolley)	1	MR1GS9001
4	Connection Yoke D	1	ER2FR9030
5	Yoke Bolt	1	ES006050
6	Slotted Nut	1	J1NL00120200
7	Split Pin	1	9009437
8	Chain Pin	1	ES041050
9	Slotted Nut	1	M2049030
10	Split Pin	1	9009424
11	Suspender T (For Motorized Trolley)	1	ER1FR9031
12	Top Pin Assembly	1	ER2FS6121
13	Top Pin Plug Assembly	1	ER2FS6128
14	O Ring	2	9013317
15	Fixing Shaft Assembly	1	ER2FS6122
16	Fixing Shaft Plug Assembly	1	ER2FS6131
17	O Ring	2	9013307
18	Plate A	1	ER1ES9123
19	Socket Bolt With Spring Washer	2	J1BG10601616
20	Plate A	1	ER1BS9123
21	Machine Screw With Spring Washer	2	M6F554010
22	Bottom Hook Complete Assembly	1	ER2FR1011
23	Bottom Hook Assembly	1	ER2FR2011
24	Hook Latch	1	ER2FR9002
25	Bottom Yoke Assembly	1	ER2FR2015
26	Thrust Bearing	1	ES022050
27	Thrust Collar A	1	ES026050
28	Hook Stopper A	2	ES027050
29	Idle Sheave Assembly	1	ER2FR6021
30	Bottom Shaft Assembly	1	ES5054050
31	Name Plate C	1	80173

9.3 Hook and Chain Parts

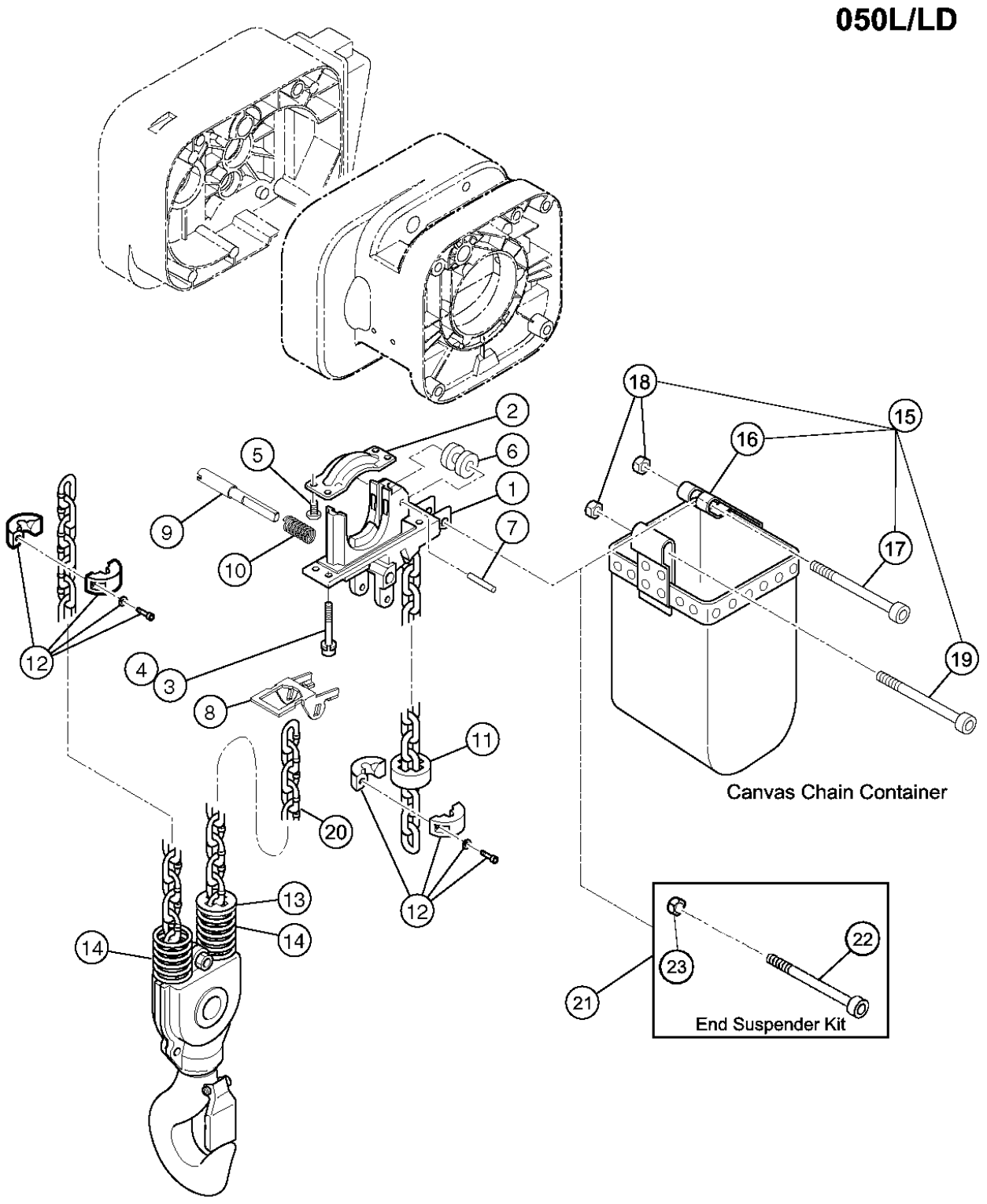

Figure 9-3-9 Hook and Chain Parts

Figure No.	Part Name	Parts Per Hoist		050L
1	Chain Guide A		1	ER2FS9331
2	Chain Guide B		1	ER2FS9332
3	Socket Bolt		4	9091274
4	Spring Lock Washer		4	9012711
5	Machine Screw With Spring Washer		4	E6F151003
6	Guide Roller		1	ER1EM9333
7	Roller Pin		1	ER2FS9334
8	Limit Lever		1	ER2FS9337
9	Limit Lever Pin	F	1	ER2FS9338
		M		ER2FS9356
10	Limit Lever Spring		1	ER2CS9357
11	Cushion Rubber		1	ER1EM9053
12	Stopper Assembly		2	ER1ES1041
13	Limiting Plate		1	ER1FH9054
14	Chain Spring		2	ER1EM9051
15	Canvas Chain Container Assembly (Max. Lifting Height 20ft)		1	BK2F2
16	Canvas Chain Container		1	ER2FS5405
17	Socket Bolt		1	90912140
18	Lever Nut		2	ES066075
19	Socket Bolt		1	90912104
20	NP Load Chain		1	LCER2025NP
21	End Suspender Kit		1	ENDS2F2
22	Socket Bolt		1	90912140
23	Lever Nut		1	ES066075

9.4 Electric Parts (Single Speed)

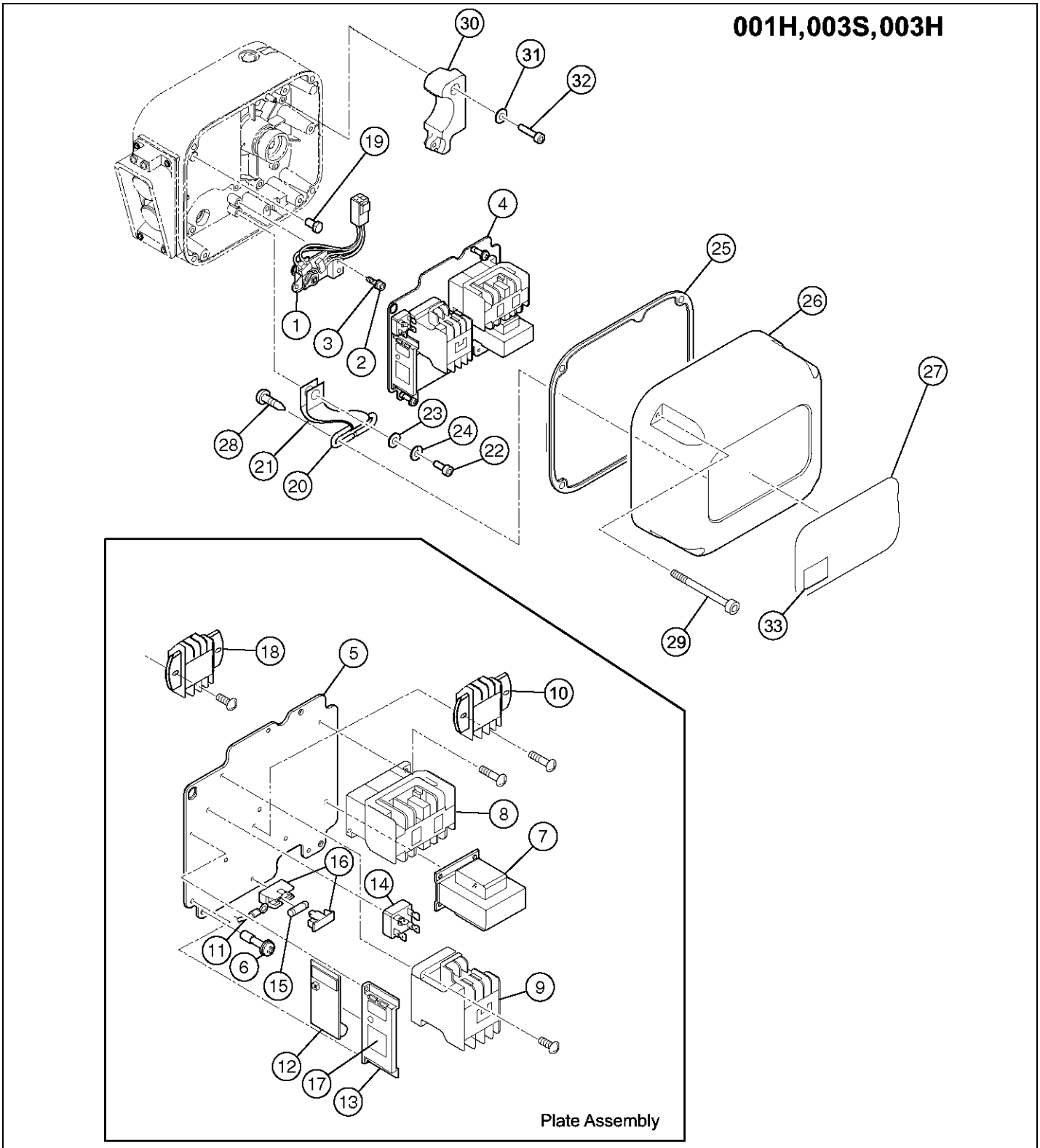

Figure 9-4-1 Electric Parts (Single Speed)

Figure No.	Part Name	Parts Per Hoist		001H	003S	003H
1	Limit Switch Complete Assembly		1	ER2CI1060		
2	Socket Bolt		3	9091247		
3	Spring Lock Washer		3	9012709		
4	Plate Assembly		1	ER2GHM03S5A2		ER2GHM05S5A2
5	Plate		1	ER2BS9441		ER2CS9441
6	Plate Screw		3	ER1BS9445		
7	Transformer		1	TRF72V611		TRF73V611
8	Electromagnetic Contactor		1	MGC23406C		MGC23406A
9	E-Stop Contactor*		1	MGC13306F*		
				MGC14306C*		
10	Terminal Block 3P		1	ECP1303AB		
11	Lead Wire		1	ER2GHM03S9A2		ER2GHM05S9A2
12	CH Meter		1	ECP91CHAF		ECP91CHAE
13	CH Meter Support		1	ECP99BKBA		
14	Rectifier		1	ECP93DIAA		
15	Fuse		1	9006275		
16	Fuse Holder		1	ECP92FZAA		
17	Name Plate CH		1	ECP99CHAA		
18	Terminal Block 6P		1	ECP1306AD		
19	Fulcrum Pin		1	ER2CS9449		
20	Cover Suspender		1	ER2CS9456		
21	Cover Belt		1	ER2BI9457		ER2CS9457
22	Socket Bolt		1	9091249		
23	Plain Washer		1	ER1BS9436		
24	Spring Lock Washer		1	9012709		
25	Packing C	F	1	ER2BS9117		ER2CS9117
		M		ER2BI9117		
26	Controller Cover	F	1	ER2BS9104		ER2CS9104
		M		ER2BS2302		ER2CS2302
27	Name Plate B		1	ER2BHM03S9A5		ER2BHM05S9A5
28	Pan Head Mach. Screw		2	9798534		
29	Socket Bolt With Spring Washer		4	J1BG10504022		
33	Name Plate D		1	ER2BHM01H9A6		ER2BHM03H9A6

*Refer to the alpha-numeric code on contactor. The Code "S-N11" corresponds to MGC13306H.
The code "CLK-25J3" corresponds to MGC14306C.

9.4 Electric Parts (Single Speed)

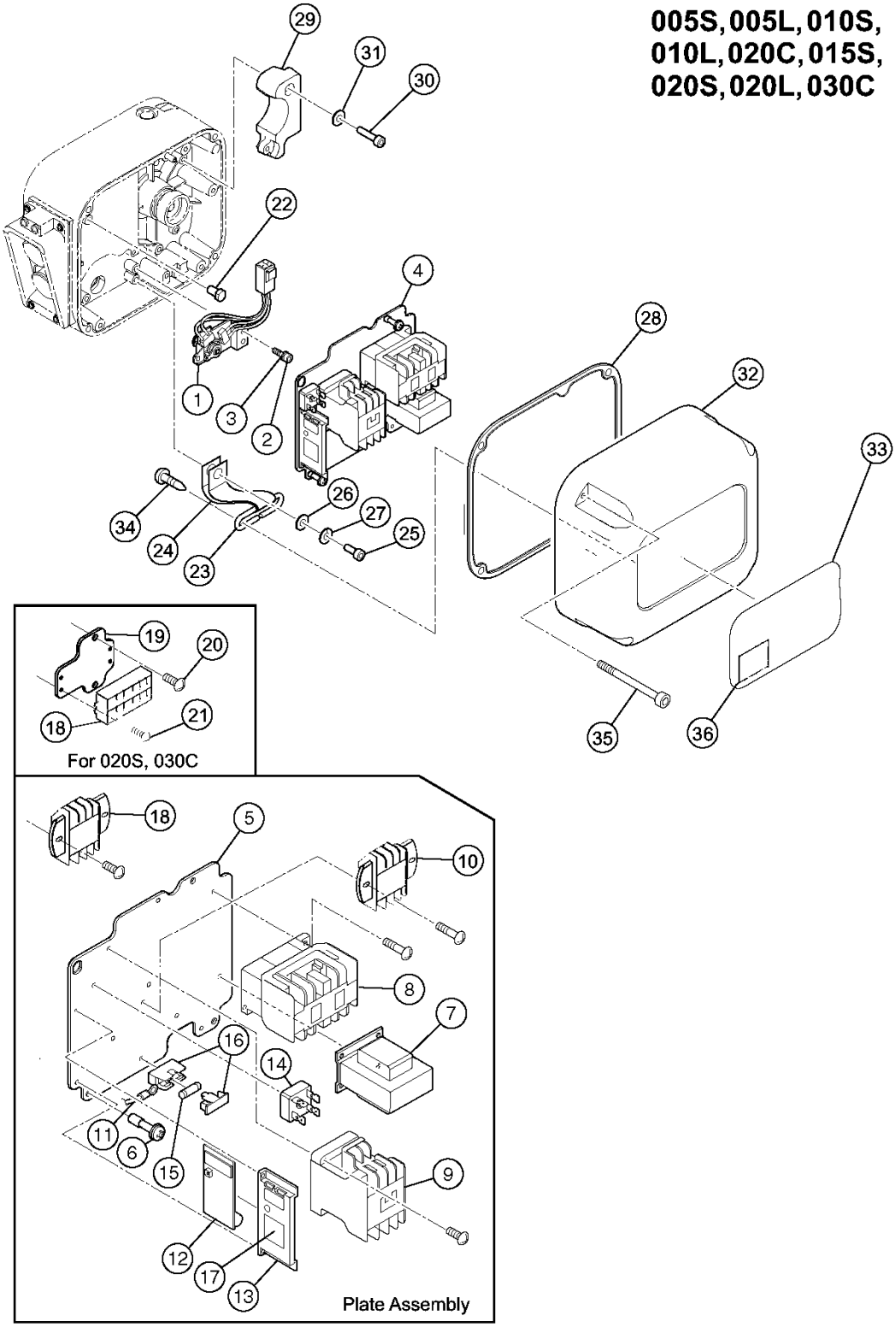

Figure 9-4-2 Electric Parts (Single Speed)

Figure No.	Part Name	Parts Per Hoist		005S	005L	010S	010L/020C	015S	020L	020S	030C
1	Limit Switch Complete Assembly		1	ER2CI1060							
2	Socket Bolt		3	9091247							
3	Spring Lock Washer		3	9012709							
4	Plate Assembly		1	ER2GHM05S 5A2	ER2GHM05L 5A2	ER2GHM10S5A2		ER2GHM20L5A2		ER2GHM20S5A2	
5	Plate		1	ER2CS9441		ER2DS9441		ER2ES9441			
6	Plate Screw		3	ER1BS9445							
7	Transformer		1	TRF73V611	TRF72V611	TRF73V611					
8	Electromagnetic Contactor		1	MGC23406A	MGC23406C	MGC23406A				MGC23406B	
9	E-Stop Contactor**		1	MGC13306F**						MGC13306H**	
				MGC14306C**							
10	Terminal Block 3P		1	ECP1303AB				ECP1303AB			
	Terminal Block 9P					ECP1309AB					
11	Lead Wire		1	ER2GHM05S 9A2	ER2GHM05L 9A2	ER2GHM05S9A2				ER2GHM20S9A2	
12	CH Meter		1	ECP91CHAE							
13	CH Meter Support		1	ECP99BKBA							
14	Rectifier		1	ECP93DIAA						ECP94DIAA	
15	Fuse		1	9006275							
16	Fuse Holder		1	ECP92FZAA							
17	Name Plate CH		1	ECP99CHAA							
18	Terminal Block 6P		1	ECP1306AD				ECP1306AD		ECP1306AF	
21	Machine Screw		2							9798512	
22	Fulcrum Pin		1	ER2CS9449							
23	Cover Suspender		1	ER2CS9456							
24	Cover Belt		1	ER2CS9457							
25	Socket Bolt		1	9091249							
26	Plain Washer		1	ER1BS9436							
27	Spring Lock Washer		1	9012709							
28	Packing C		1	ER2CS9117		ER2DS9117		ER2ES9117			
29	Balancer	F	1			ER2DS9109				ER2ES9109	
		M									
30	Socket Bolt		2	90912154		90912154					
			3							9091273	
31	Spring Lock Washer		2	9012709		9012709					
			3							9012711	
32	Controller Cover	F	1	ER2CS9104		ER2DS9104		ER2ES9104			
		M		ER2CS2302		ER2DS2302		ER2ES2302			
33	Name Plate B		1	ER2BHM05S9A5		ER2BHM10S9A5		ER2BHM20S9A5			
34	Pan Head Mach. Screw		2	9798534							
35	Socket Bolt With Spring Washer		4	J1BG10504022		J1BG10604024					
36	Name Plate D		1				ER2BHM20S9A6	ER2BHM15 M9A6			ER2BHM30 R9A6

*Name Plate D for 020C ONLY
**Refer to the alpha-numeric code on contactor. The code “S-U12” corresponds to MGD13306F.
The code “S-N11” corresponds to MGC13306H. The code “CLK-25J3” corresponds to MGC14306C.

9.4 Electric Parts (Single Speed)

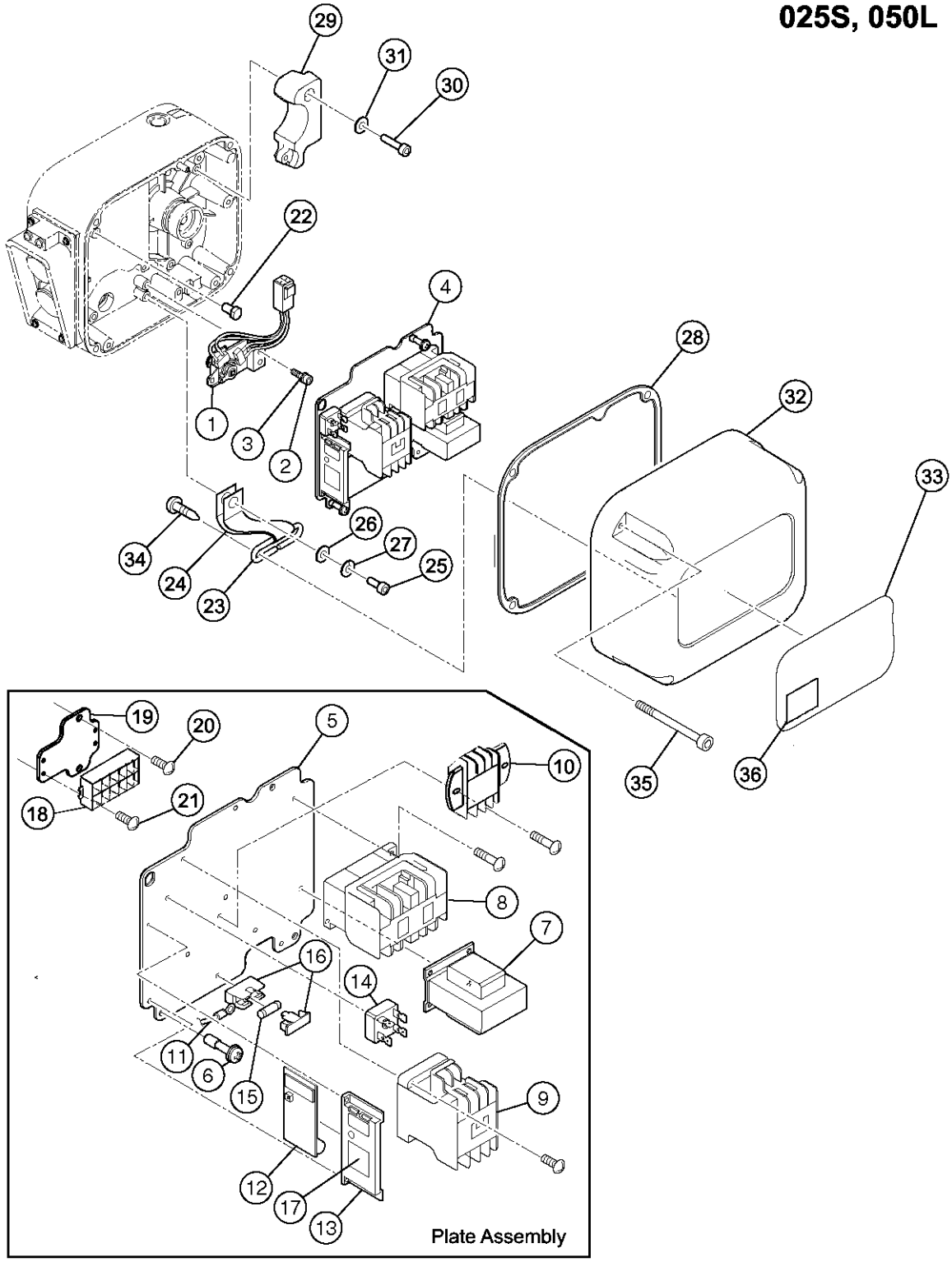

Figure 9-4-3 Electric Parts (Single Speed)

Figure No.	Part Name	Parts Per Hoist		025S	050L
1	Limit Switch Complete Assembly		1	ER2CI1060	
2	Socket Bolt		3	9091247	
3	Spring Lock Washer		3	9012709	
4	Plate Assembly		1	ER2GHM20S5A2	
5	Plate		1	ER2ES9441	
6	Plate Screw		3	ER1BS9445	
7	Transformer		1	TRF73V611	
8	Electromagnetic Contactor		1	MGC23406B	
9	E-Stop Contactor*		1	MGC13306H* MGC14306C*	
10	Terminal Block 3P		1	ECP1303AB	
11	Lead Wire		1	ER2GHM020S9A2	
12	CH Meter		1	ECP91CHAE	
13	CH Meter Support		1	ECP99BKBA	
14	Rectifier		1	ECP94DIAA	
15	Fuse		1	9006275	
16	Fuse Holder		1	ECP92FZAA	
17	Name Plate CH		1	ECP99CHAA	
18	Terminal Block 6P		1	ECP1306AF	
21	Machine Screw		2	9798512	
22	Fulcrum Pin		1	ER2CS9449	
23	Cover Suspender		1	ER2CS9456	
24	Cover Belt		1	ER2CS9457	
25	Socket Bolt		1	9091249	
26	Plain Washer		1	ER1BS9436	
27	Spring Lock Washer		1	9012709	
28	Packing C		1	ER2FS9117	
29	Balancer		1	ER2FS9109	
30	Socket Bolt		3	9091273	
31	Spring Lock Washer		3	9012711	
32	Controller Cover	F	1	ER2FS9104	
		M		ER2FS2302	
33	Name Plate B		1	ER2BHM25S9A5	
34	Pan Head Mach. Screw		2	9798534	
35	Socket Bolt With Spring Washer		4	J1BG10604040	
36	Name Plate D		1		ER2BHM50R9A6

*Refer to the alpha-numeric code on contactor. The code “S-N11” corresponds to MGC13306H. The code “CLK-25J3” corresponds to MGC14306C.

9.5 Electric Parts (Dual Speed)

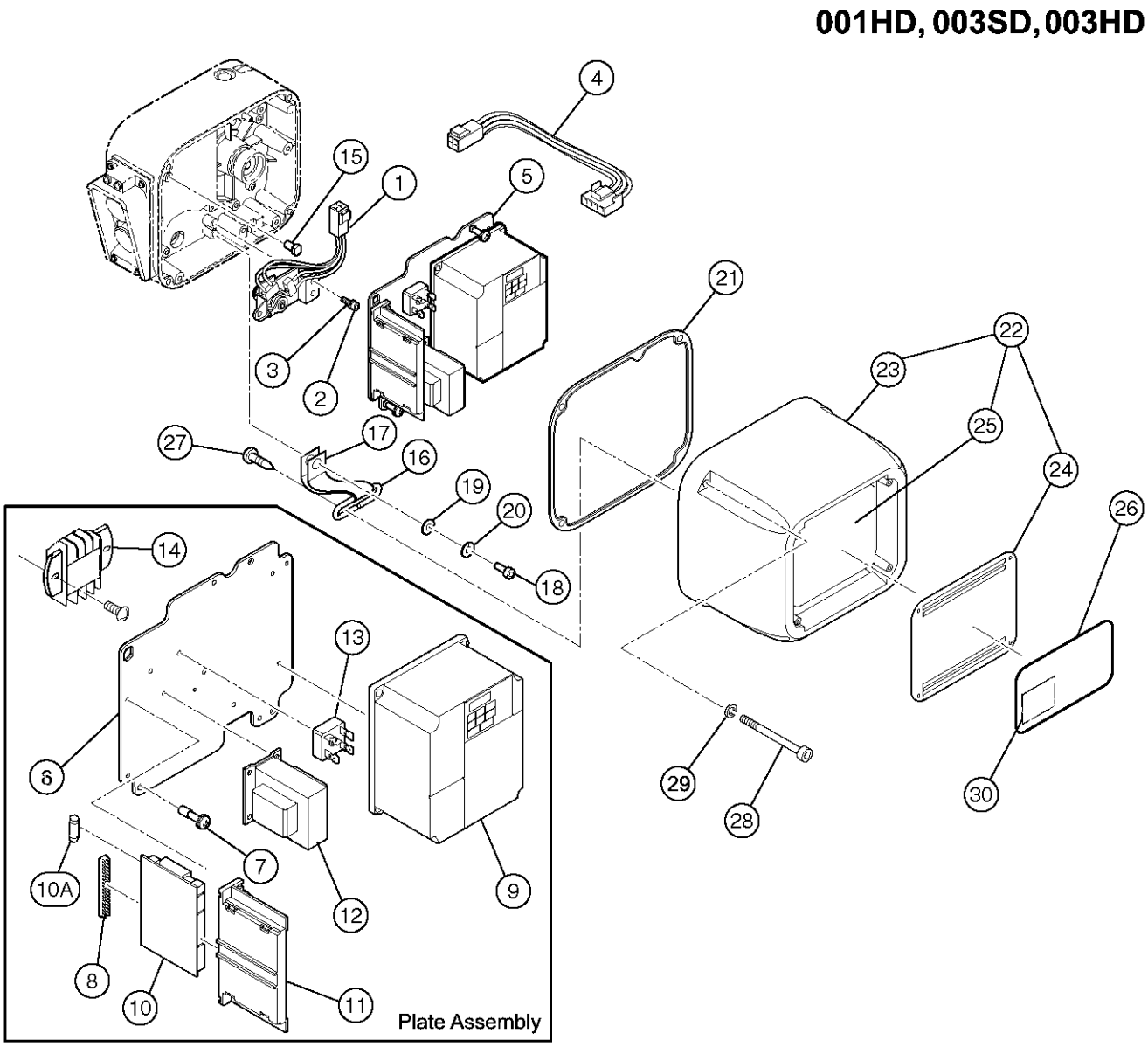

Figure 9-5-1 Electric Parts (Dual Speed)

Figure No.	Part Name	Parts Per Hoist		001HD	003SD	003HD
1	Limit Switch Complete Assembly		1	ER2CI1060		
2	Socket Bolt		3	9091247		
3	Spring Lock Washer		3	9012709		
4	LS Harness		1	ER2CI9554		
5	Plate Assembly	M, 2V	1	ER2LHE03I5A2		ER2LHE05I5A2
		F, 2V		ER2BHE03I5A2		ER2BHE05I5A2
		M, 4V		ER2LHN03I5A2		ER2LHN05I5A2
		F, 4V		ER2BHN03I5A2		ER2BHN05I5A2
6	Plate		1	ER2BI9441		ER2CI9441
7	Plate Screw		3	ER1BS9445		
8	Bushing		1	ECP99JBAC		
9	VFD Assembly	M, 2V	1	INV60FH24		INV615H24
		F, 2V		INV60FH21		INV615H21
		M, 4V		INV60FM24		INV615M24
		F, 4V		INV60FM21		INV615M21
10	Interface Board		1	ECP91KB02		
10A	Fuse		1	9006275		
11	Board Support		1	ECP99BKAA		
12	Transformer	2V	1	TRF32C612		
		4V		TRF32N612		
13	Rectifier		1	ECP93DIAA		
14	Terminal Block 6P		1	ECP1306AD		
15	Fulcrum Pin		1	ER2CS9449		
16	Cover Suspender		1	ER2CS9456		
17	Cover Belt		1	ER2CS9457		
18	Socket Bolt		1	9091249		
19	Plain Washer		1	ER1BS9436		
20	Spring Lock Washer		1	9012709		
21	Packing C	M	1	ER2BI9117		ER2CS9117
22	Controller Cover Assembly	2V	1	ER2BI2104		ER2CI2104
		4V		ER2BI1104		ER2CI1104
23	Controller Cover		1	ER2BI9104		ER2CI9104
24	Resistor Cover		1	ER2BI9185		ER2CI9185
25	Braking Resistor	2V	1	INV70EE16		INV709E16
		4V		INV70EY16		INV709Y16
26	Name Plate B		1	ER2BHM03I9A5		ER2BHM05I9A5
27	Pan Head Mach. Screw		2	9798534		
28	Socket Bolt		4	9091233		
29	Toothed Lock Washer		4	9679708		
30	Name Plate D		1	ER2BHM01H9A6		ER2BHM03H9A6

9.5 Electric Parts (Dual Speed)

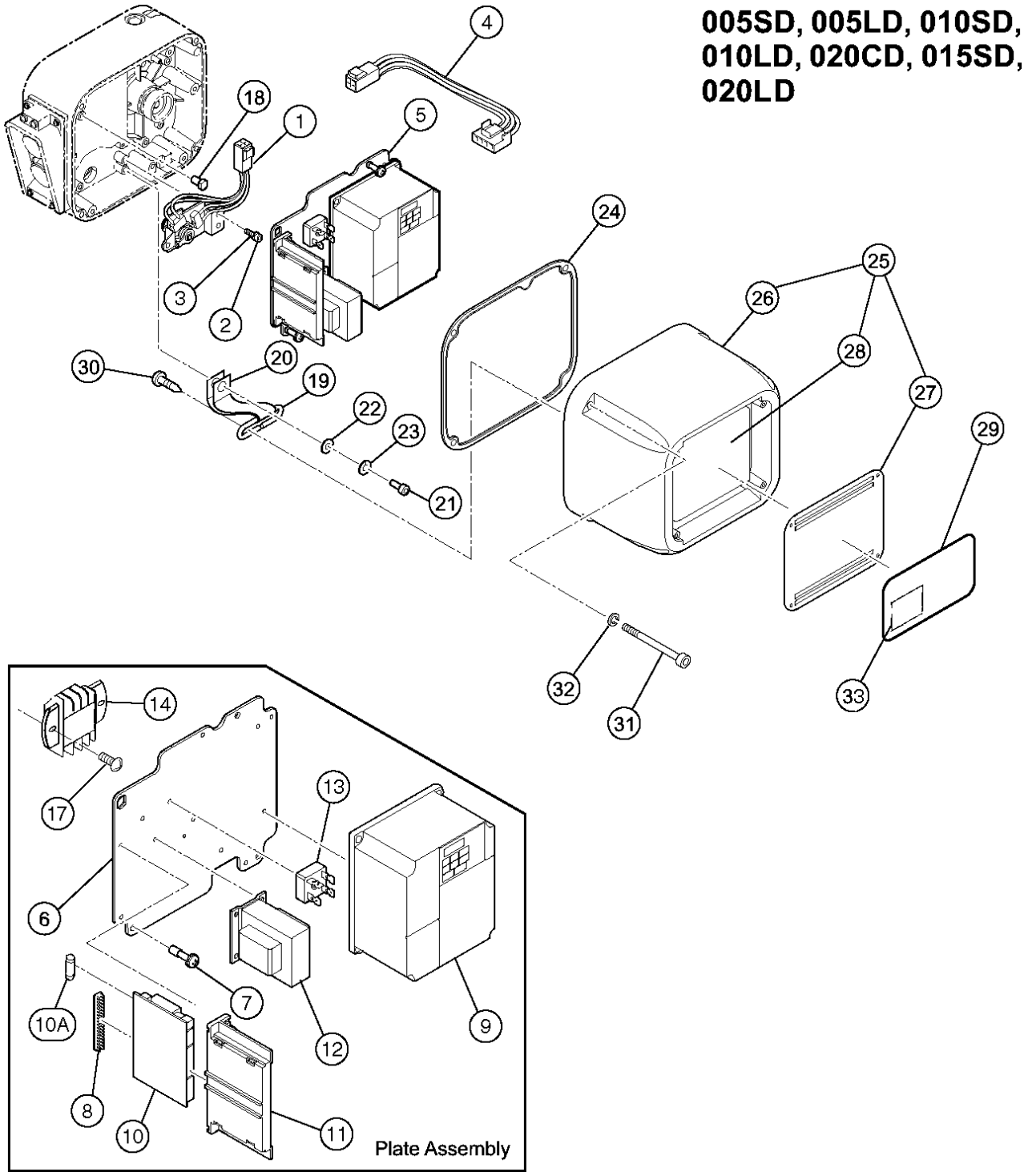

Figure 9-5-2 Electric Parts (Dual Speed)

Figure No.	Part Name	Parts Per Hoist		005SD	005LD	010SD	010LD/020CD	015SD	020LD
1	Limit Switch Complete Assembly		1	ER2CI1060					
2	Socket Bolt		3	9091247					
3	Spring Lock Washer		3	9012709					
4	LS Harness		1	ER2CI9554					
5	Plate Assembly	M, 2V	1	ER2LHE05I5A2	ER2LHE05J5A2	ER2LHE10I5A2	ER2LHE10J5A2	ER2LHE20J5A2	
		F, 2V	1	ER2BHE05I5A2	ER2BHE05J5A2	ER2BHE10I5A2	ER2BHE10J5A2	ER2BHE20J5A2	
		M, 4V	1	ER2LHN05I5A2	ER2LHN05J5A2	ER2LHN10I5A2	ER2LHN10J5A2	ER2LHN20J5A2	
		F, 4V	1	ER2BHN05I5A2	ER2BHN05J5A2	ER2BHN10I5A2	ER2BHN10J5A2	ER2BHN20J5A2	
6	Plate		1	ER2CI9441		ER2DI9441		ER2EI9441	
7	Plate Screw		3	ER1BS9445					
8	Bushing		1	ECP99JBAC					
9	Inverter Assembly	M, 2V	1	INV615H24	INV60FH24	INV622H24	INV615H24	INV622H24	
		F, 2V		INV615H21	INV60FH21	INV622H21	INV615H21	INV622H21	
		M, 4V		INV615M24	INV60FM24	INV622M24	INV615M24	INV622M24	
		F, 4V		INV615M21	INV60FM21	INV622M21	INV615M21	INV622M21	
10	Interface Board		1	ECP91KB02					
10A	Fuse		1	9006275					
11	Board Support		1	ECP99BKAA					
12	Transformer	2V	1	TRF32C612					
		4V		TRF32N612					
13	Rectifier		1	ECP93DIAA					
14	Terminal Block 6P		1	ECP1306AD					
17	Machine Screw		2	9798512					
18	Fulcrum Pin		1	ER2CS9449					
19	Cover Suspender		1	ER2CS9456					
20	Cover Belt		1	ER2CS9457					
21	Socket Bolt		1	9091249					
22	Plain Washer		1	ER1BS9436					
23	Spring Lock Washer		1	9012709					
24	Packing C		1	ER2CS9117		ER2DS9117		ER2ES9117	
25	Controller Cover Assembly	2V	1	ER2CI2104	ER2CJ2104	ER2DI2104	ER2DJ2104	ER2EJ2104	
		4V		ER2CI1104	ER2CJ1104	ER2DI1104	ER2DJ1104	ER2EJ1104	
26	Controller Cover		1	ER2CI9104		ER2DI9104		ER2EI9104	
27	Resistor Cover		1	ER2CI9185		ER2DI9185		ER2EI9185	
28	Braking Resistor	2V	1	INV709E16	INV70EE16	INV718E16	INV709E16	INV718E16	
		4V		INV709Y16	INV70EY16	INV718Y16	INV709Y16	INV718Y16	
29	Name Plate B		1	ER2BHM05I9A5		ER2BHM10I9A5		ER2BHM20I9A5	
30	Pan Head Machine Screw		2	9798534					
31	Socket Bolt		4	9091233		9091254			
32	Toothed Lock Washer		4	9679708		9679709			
33	Name Plate D		1				ER2BHM20S9A6*	ER2BHM15M9A6	

*Name Plate D for 020C ONLY

9.5 Electric Parts (Dual Speed)

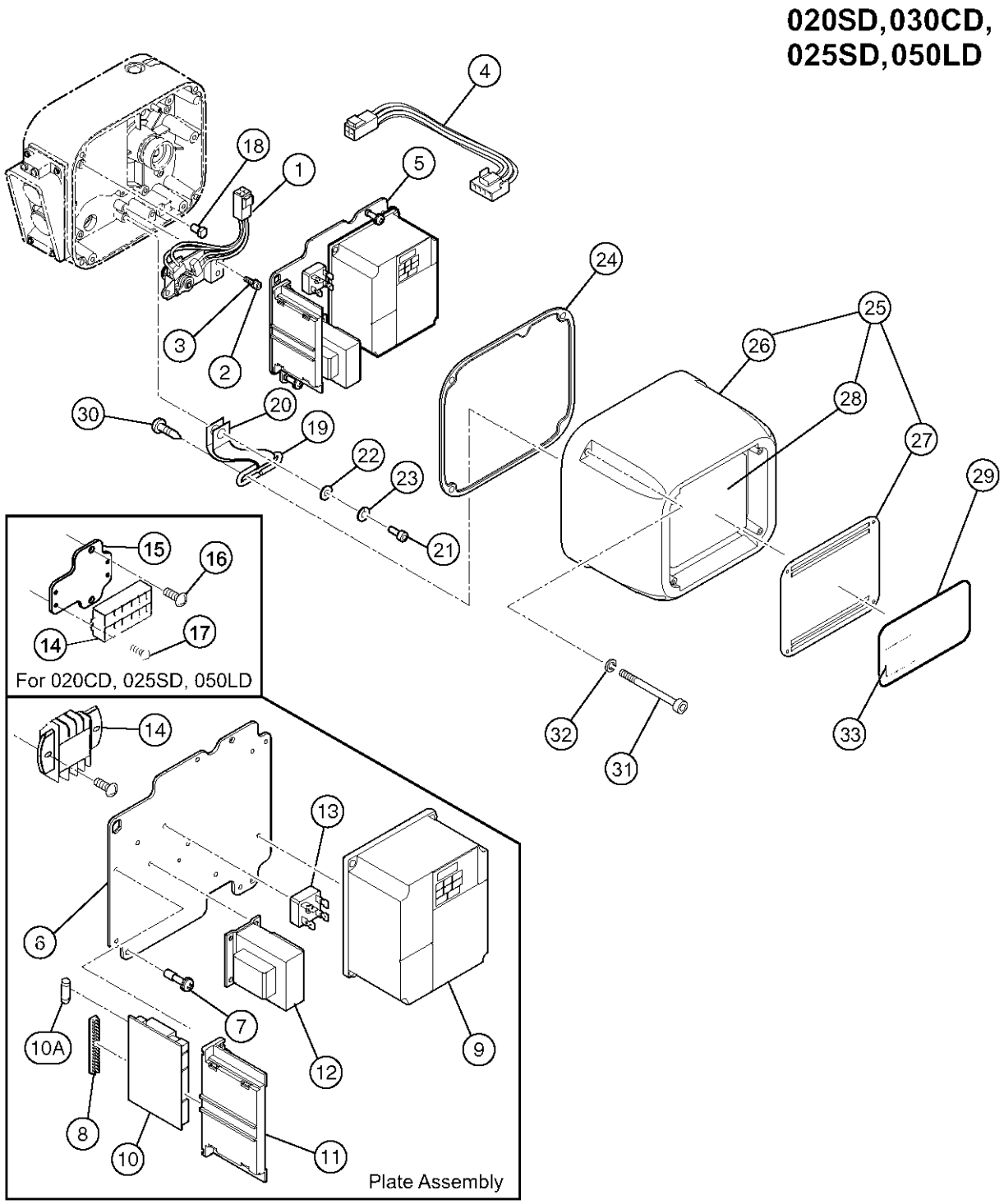

Figure 9-5-3 Electric Parts (Dual Speed)

Figure No.	Part Name	Parts Per Hoist		020SD	030CD	025SD	050LD
1	Limit Switch Complete Assembly		1	ER2CI1060			
2	Socket Bolt		3	9091247			
3	Spring Lock Washer		3	9012709			
4	LS Harness		1	ER2CI9554			
5	Plate Assembly	M, 2V	1	ER2LHE20I5A2			
		F, 2V	1	ER2BHE20I5A2			
		M, 4V	1	ER2LHN20I5A2			
		F, 4V	1	ER2BHN20I5A2			
6	Plate		1	ER2EI9441			
7	Plate Screw		3	ER1BS9445			
8	Bushing		1	ECP99JBAC			
9	Inverter Assembly	M, 2V	1	INV637H24			
		F, 2V		INV637H21			
		M, 4V		INV637M24			
		F, 4V		INV637M21			
10	Interface Board		1	ECP91KB02			
10A	Fuse		1	9006275			
11	Board Support		1	ECP99BKAA			
12	Transformer	2V	1	TRF32C612			
		4V		TRF32N612			
13	Rectifier		1	ECP94DIAA	ECP94DIAA		
14	Terminal Block 6P		1	ECP1306AF	ECP1306AF		
17	Machine Screw		2	9798512			
18	Fulcrum Pin		1	ER2CS9449			
19	Cover Suspender		1	ER2CS9456			
20	Cover Belt		1	ER2CS9457			
21	Socket Bolt		1	9091249			
22	Plain Washer		1	ER1BS9436			
23	Spring Lock Washer		1	9012709			
24	Packing C		1	ER2ES9117		ER2FS9117	
25	Controller Cover Assembly	2V	1	ER2EI2104		ER2FI2104	
		4V		ER2EI1104		ER2FI1104	
26	Controller Cover		1	ER2EI9104		ER2FI9104	
27	Resistor Cover		1	ER2EI9185			
28	Braking Resistor	2V	1	INV735E16			
		4V		INV735Y16			
29	Name Plate B		1	ER2BHM20I9A5			
30	Pan Head Machine Screw		2	9798534			
31	Socket Bolt		4	9091254			
32	Toothed Lock Washer		4	9679709			
33	Name Plate D		1		ER2BHM30R9A6	ER2BHM25I9A6	ER2BHM50K9A6

9.6 Power Supply and Pendant Parts

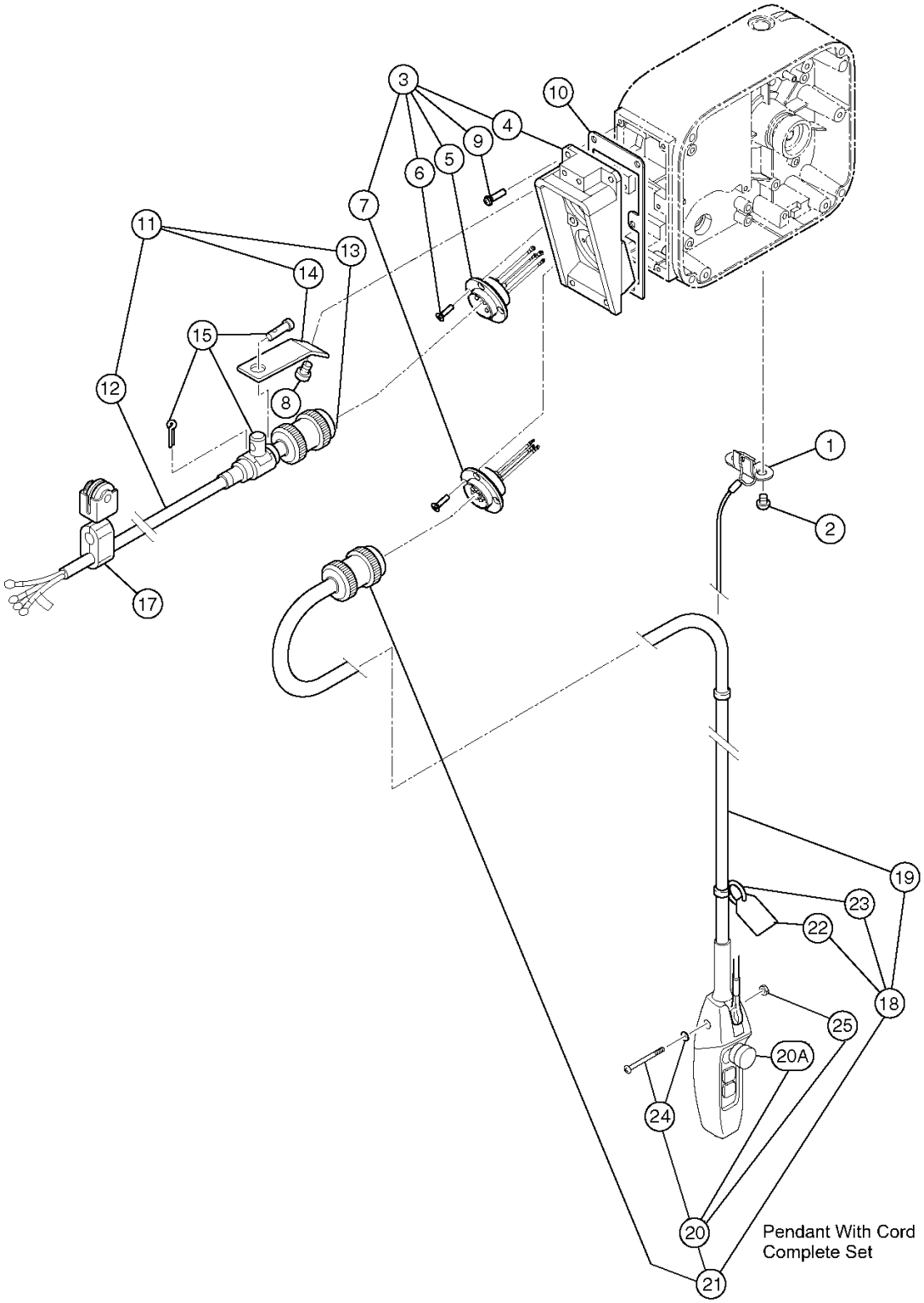

Figure 9-6-1 Power Supply and Pendant Parts (Plug Connection)

Figure No.	Part Name	Parts Per Hoist		001H	003S	003H	005L	005S	010L/ 020C	010S	015S	020L	020S	030C	025S	050L
1	Cord Support (Wire Stop)		1	ER1BS9535												
2	Mach. Screw W/Spring Washer		2	M6F554010												
3	Socket Frame Complete Assembly	S	1	ER2CS4511							ER2ES4511					
		D		ER2CI4511					ER2DI4511		ER2EI4511					
4	Socket Frame		1	ER2CS9511												
5	Socket 4P Assembly	S	1	ER2CS2523							ER2ES2523					
		D		ER2CI2523					ER2CS2523		ER2EI2523					
6	Tapping Flat Head Mach. Screw		8	ES558003												
7	Socket 8P Assembly	S	1	ER2CS2564												
		D		ER2CI2564							ER2EI2564					
8	Mach. Screw W/Spring Washer		2	ES650005S												
9	Mach. Screw W/Spring Washer		6	MS561010												
10	Socket Frame Packing		1	ER2CS9512												
11	Power Supply Cable 4C Assembly		1	ZBZA12CH1000									ZBZA12AH1000			
12	Power Supply Cable 4C		ft	16/4									14/4			
13	Plug 4P		1	ECP2304AD									ECP2304AF			
14	Cable Support Arm		1	ER1BS9541												
15	Cable Support 12 Assembly		1	ES822003												
	Cable Support 14 Assembly												MS1724010			
17	Cable Hanger 14 Assembly		A/R	ES1527003												
18	Pendant W/Cord Complete Assembly	S	1	ZB10025H1000												
		D		ZB20025I1000												
19	Pendant Cord	S	ft	16/4P												
		D		16/6P												
20	Pendent Assembly	S	1	SWD1100AA												
		D		SWD2200AA												
20A	E-Stop Button and Switch Assembly		1	SWD9024AA												
21	Plug 8P	S	1	ECP2108AA												
		D		ECP2108AB												
22	Warning Tag PB		1	WTAG7												
23	Tag Holder		1	E3S787003												
24	Machine Screw w/Spring Washer		1	J1AP24002608												
25	Nut		1	9093414												

Note: A/R = As required, one every 5 ft. of Power Supply Cable.

9.6 Power Supply and Pendant Parts

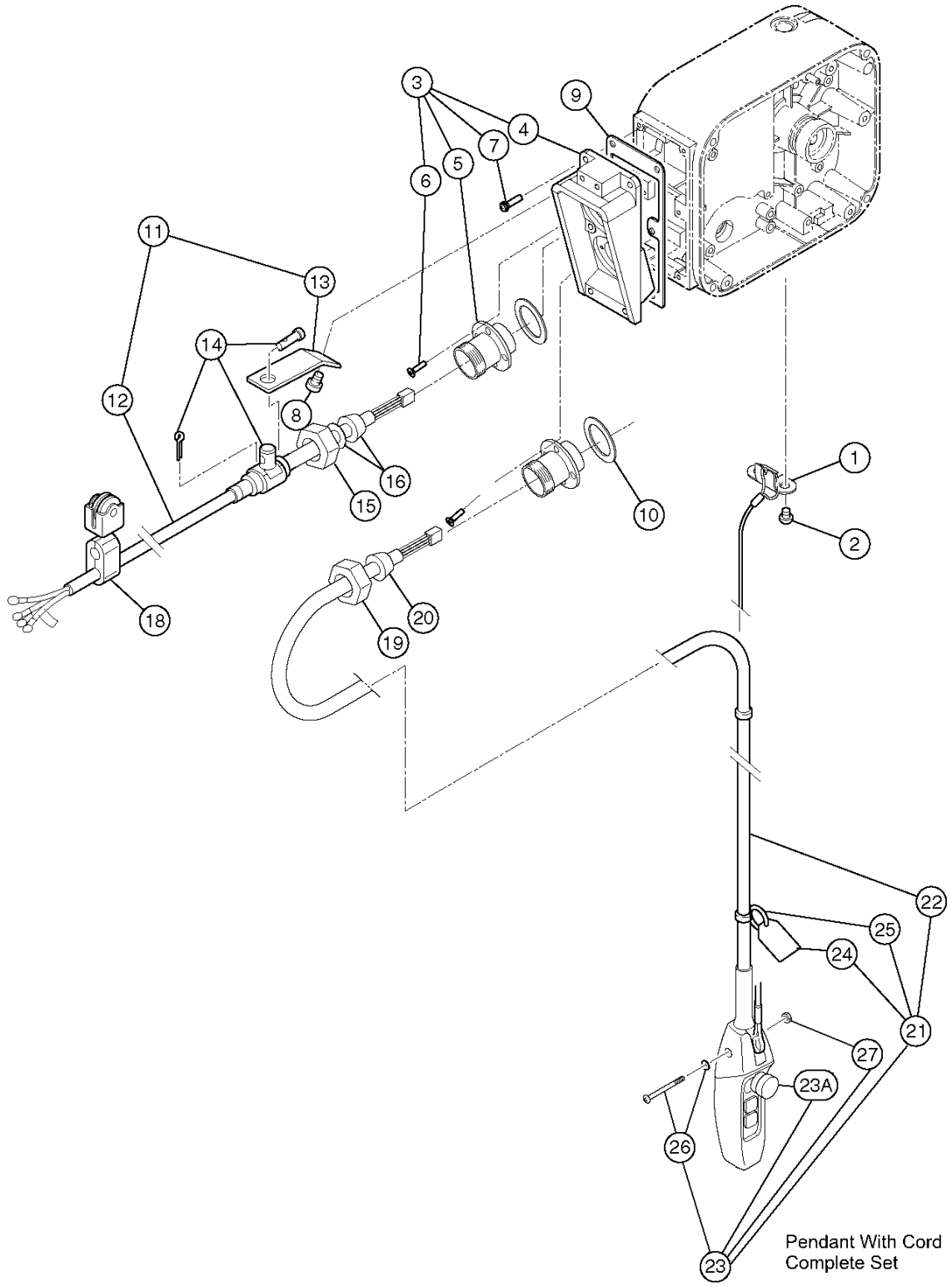

Figure 9-6-2 Power Supply and Pendant Parts (Direct Connection)

Figure No.	Part Name	Parts Per Hoist		001H	003S	003H	005L	005S	010L/ 020C	010S	015S	020L	020S	030S	025S	050L
1	Cord Support (Wire Stop)		1	ER1BS9535												
2	Mach. Screw W/Spring Washer		2	M6F554010												
3	Socket Frame Complete Assembly	S	1	ER2CS4511							ER2ES4511					
		D		ER2CI4511							ER2EI4511					
4	Socket Frame		1	ER2CS9511												
5	Holder C		2	ECP5924AL												
6	Tapping Mach. Screw		8	ER1BS9517												
7	Mach. Screw W/Spring Washer		6	MS561010												
8	Mach. Screw W/Spring Washer		2	ES650005S												
9	Socket Frame Packing		1	ER2CS9512												
10	Holder Packing		2	ECP5924AM												
11	Power Supply Cable 4C Assembly		1	ZBZA12CH1000									ZBZA12AH1000			
12	Power Supply Cable 4C		ft	16/4									14/4			
13	Cable Support Arm		1	ER1BS9541												
14	Cable Sup. 12 Assembly		1	ES822003												
	Cable Sup. 14 Assembly												MS1724010			
15	Holder A		1	ECP5924AA												
16	Cable Packing		1	ECP6912AA									ECP6914AA			
18	Cable Hanger 14 Assembly		A/R	ES1527003												
19	Holder A		1	ECP5924AA												
20	Cable Packing		1	ECP6912AA												
21	Pendant W/Cord Complete Assembly	S	1	ZB10025H1000DW												
		D		ZB20025I1000DW												
22	Pendant Cord	S	ft	16/4P												
		D		16/6p												
23	Pendant Assembly	S	1	SWD1100AA												
		D		SWD2200AA												
23A	E-Stop Button and Switch Assembly		1	SWD9024AA												
24	Warning Tag PB		1	WTAG7												
25	Tag Holder		1	E3S787003												
26	Machine Screw w/Spring Washer		1	J1AP24002608												
27	Nut		1	9093414												

Note: A/R = As required, one every 5 ft. of Power Supply Cable.

This Page Intentionally Left Blank

This Page Intentionally Left Blank

Harrington Hoists, Inc.
401 West End Avenue
Manheim, PA 17545

www.harringtonhoists.com

Toll Free: 800-233-3010
Phone: 717-665-2000
Fax: 717-665-2861

ER2OM-ENG